+44(0)2476 613 223

info@autolift.co.uk

www.autolift.co.uk

AUTOLIFT LTD
VEHICLE JACKING SYSTEMS

CELEBRATING 1999 25TH 2024 ANNIVERSARY

MADE IN BRITAIN

PROFESSIONAL COMMERCIAL HYDRAULIC LIFTING EQUIPMENT

TWIN RAM JACKS

SPREADER BEAMS

SINGLE RAM JACKS

TRANSMISSION JACKS

FLOOR JACKS

JACKING BEAMS

GEA GARAGE EQUIPMENT ASSOCIATION

MADE IN BRITAIN®

UK CA CE

+44(0)2476 613 223

info@autolift.co.uk

www.autolift.co.uk

AUTOLIFT LTD
VEHICLE JACKING SYSTEMS

CELEBRATING 1999 25TH 2024 ANNIVERSARY

MADE IN BRITAIN

OUR PRINCIPLES BEHIND EVERY PRODUCT

SAFETY

Safety is built into everything we do. Our jacks are designed and manufactured with integrated safety features to protect people and vehicles.

QUALITY

All Autolift jacks are made to the highest standard using quality materials and precision engineering for long-lasting performance.

PROFESSIONAL

We take pride in our work and our products. Professional in everything we do, from design and manufacture to customer service.

STRONG

Built to handle the toughest jobs, our jacks are robust, durable and engineered for maximum strength and stability.

RELIABLE

You can depend on Autolift. Our jacks deliver consistent performance you can rely on, time after time.

SUPPORTIVE

We're here for you. Our team provides expert advice, after-sales support and service to keep you moving.

Autolift is a family run business & the leading UK manufacturer of commercial vehicle lifting equipment with a long track record of producing high performance and well-engineered equipment for the truck, bus & plant industries. We provide cost effective vehicle lifting equipment without compromising on quality or performance.

WARRANTY 5 YEAR WARRANTY

5 YEAR WARRANTY

We offer a 5 year warranty on most new Autolift products.

MADE IN BRITAIN®

MADE IN BRITAIN

All Autolift products are designed & manufactured by us in the UK.

SERVICE

ON SITE SERVICE

We can offer servicing on site or recommend authorised third-parties in your area.

SPARE PARTS

SPARE PARTS IN STOCK

Autolift spare parts are kept on the shelf for minimum downtime.

+44(0)2476 613 223

info@autolift.co.uk

www.autolift.co.uk

AUTOLIFT LTD
VEHICLE JACKING SYSTEMS

CELEBRATING 1999 25TH 2024 ANNIVERSARY

MADE IN BRITAIN

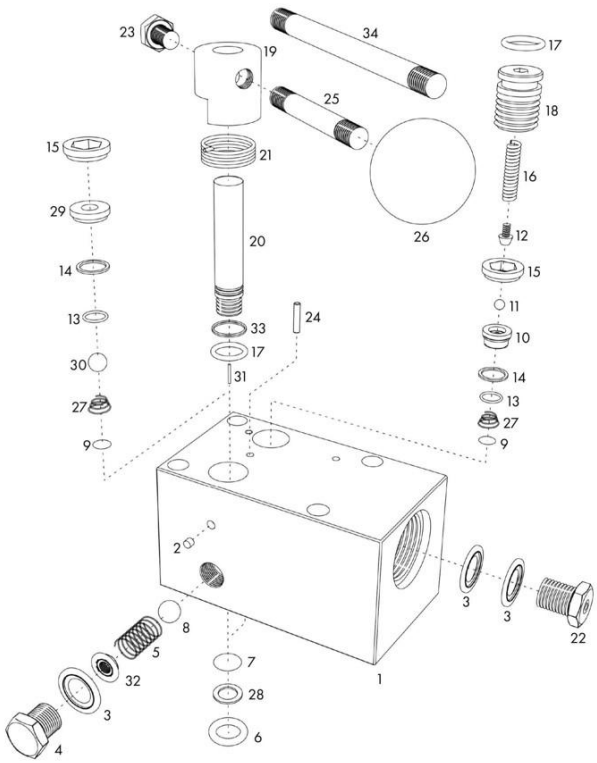

DESIGNED BY AUTOLIFT LTD
VEHICLE JACKING SYSTEMS

All Autolift parts and components are designed in the UK. As the industry continues to evolve, Autolift is committed to developing new hydraulic lifting solutions that meet changing customer requirements, improve workshop efficiency, and provide long-lasting performance.

ENGINEERED BY AUTOLIFT LTD
VEHICLE JACKING SYSTEMS

Autolift is meticulous about the precision engineering of our component parts and demand the very best.

All Autolift equipment is built to comply with UKCA & CE markings (Machinery Directive 2006/42/EC), engineering standard: BS EN 1494:2001.

+44(0)2476 613 223

info@autolift.co.uk

www.autolift.co.uk

AUTOLIFT LTD
VEHICLE JACKING SYSTEMS

CELEBRATING 1999 25TH 2024 ANNIVERSARY

MADE IN BRITAIN

BUILT & TESTED BY AUTOLIFT LTD
VEHICLE JACKING SYSTEMS

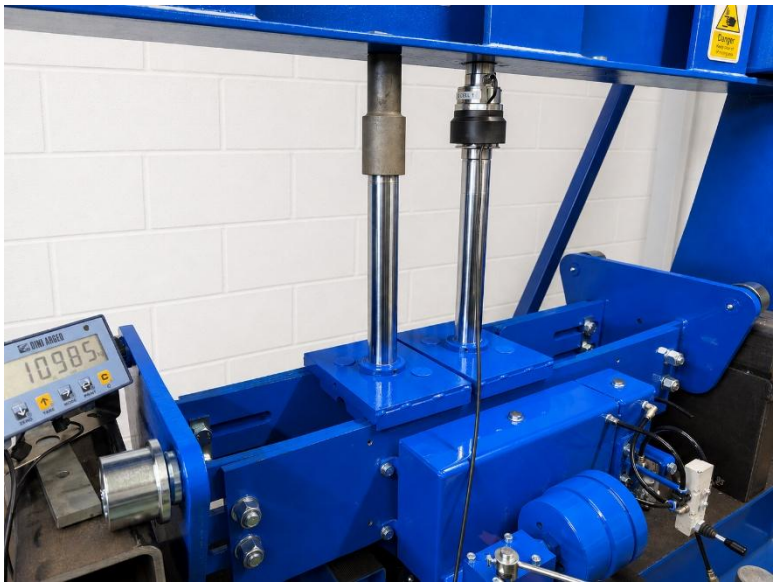

At Autolift, quality is built into every product we manufacture. Our aim is to provide lifting equipment that delivers safe, reliable and dependable performance throughout its working life.

Each product is professionally assembled by our experienced team and undergoes an individual load test using specially calibrated equipment, giving customers complete confidence that it has been tested against strict quality control procedures.

QUALITY CHECKED BY AUTOLIFT LTD
VEHICLE JACKING SYSTEMS

All Autolift equipment undergoes rigorous final quality checks by our experienced team before leaving our factory, ensuring every product meets our high standards of safety, performance and reliability.

+44(0)2476 613 223

info@autolift.co.uk

www.autolift.co.uk

AUTOLIFT LTD
VEHICLE JACKING SYSTEMS

CELEBRATING 1999 25TH 2024 ANNIVERSARY

MADE IN BRITAIN

SERVICED BY AUTOLIFT LTD
VEHICLE JACKING SYSTEMS

Duty of care…

Meet your LOLER obligations by having your equipment maintained & inspected annually.

At Autolift, our commitment to our customers extends far beyond the point of purchase. We provide comprehensive after-sales support to ensure your lifting equipment continues to operate safely, efficiently and reliably throughout its service life. We understand how critical reliable lifting equipment is to your business, which is why we aim to provide fast, effective support whenever you need it.

Our experienced engineers can carry out scheduled servicing and preventative maintenance on site, or, where more convenient, we can recommend a fully trained and authorised service partner in your area. Regular servicing helps maximise equipment lifespan, maintain peak performance and identify potential issues before they become costly problems.

- **Genuine Autolift spare parts available from stock**
- **Fast response to minimise workshop downtime**
- **Servicing by Autolift engineers or authorised service partners**
- **Helping keep your equipment safe, compliant and operating at its best**

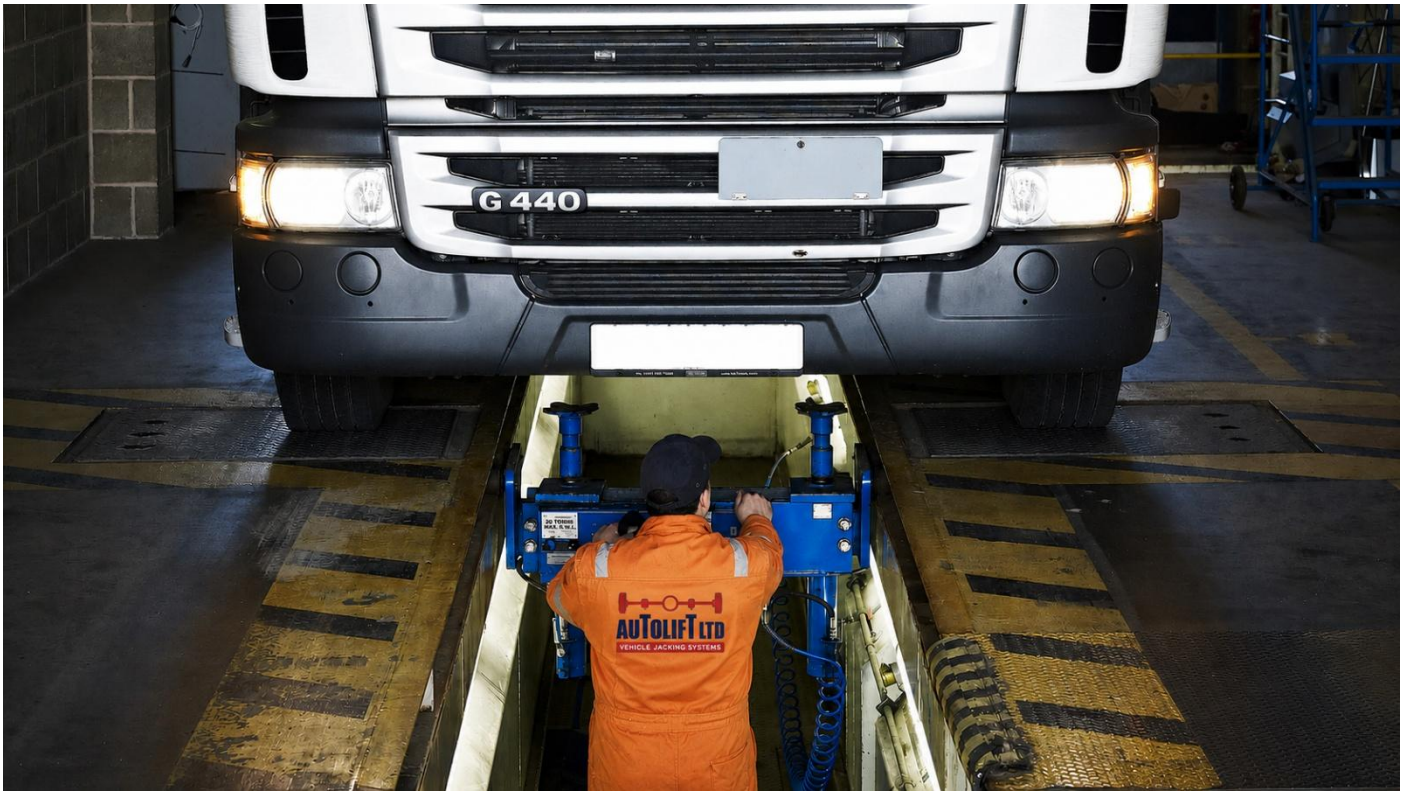

+44(0)2476 613 223

info@autolift.co.uk

www.autolift.co.uk

AUTOLIFT LTD
VEHICLE JACKING SYSTEMS

CELEBRATING 1999 25TH 2024 ANNIVERSARY

MADE IN BRITAIN

Pit Jack Key Features

Plated Rams

Sealed ram unit & latest advancements in seal technology ensure water (causing rust) & dirt do not enter the unit, thus significantly increasing their life-span.

Security Stuts

Optional extra mechanical locking system to prevent accidental lowering or in the event of hydraulic failure.

Roller Wheels

Provide quick and easy movement along the length of the pit.

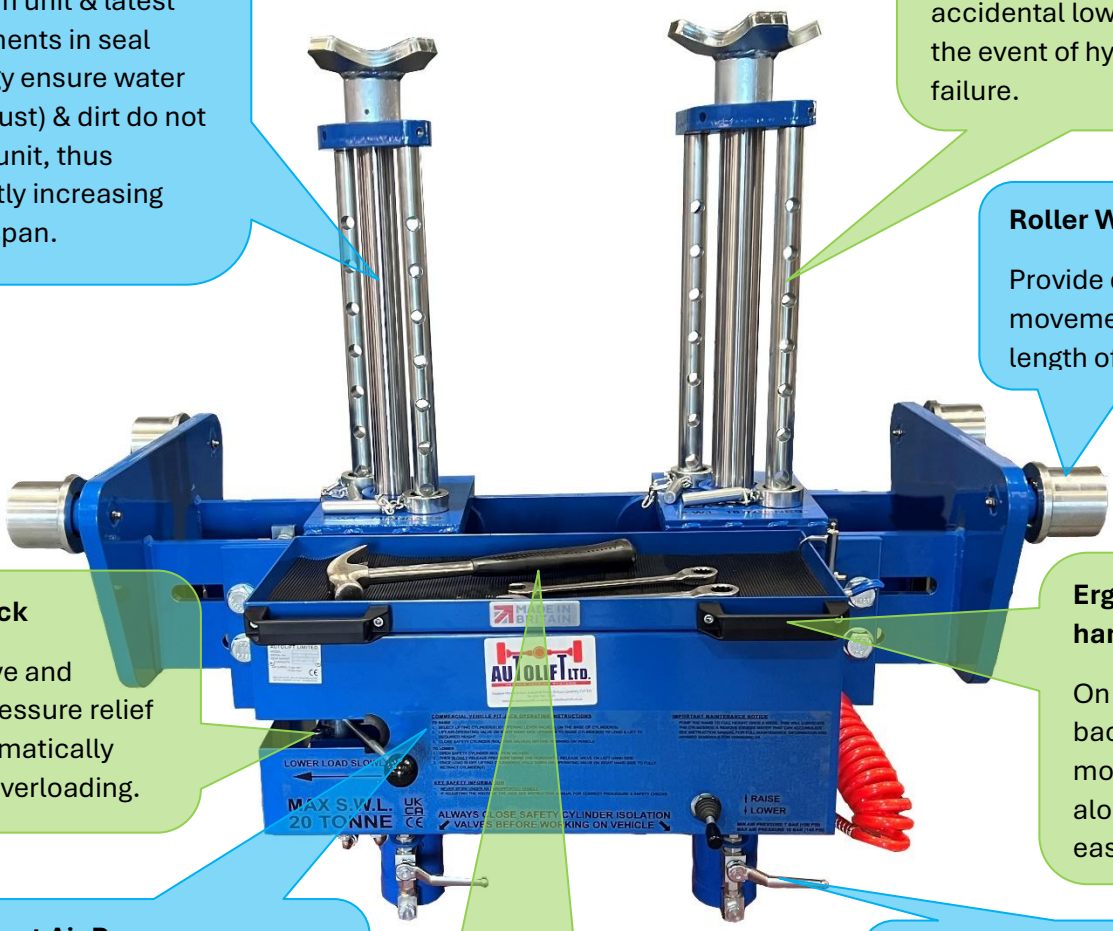

Pump Block

Safety valve and internal pressure relief valve automatically prevents overloading.

Ergonomic handles

On front and back of jack to move the jack along the pit with ease.

High Output Air Pump

Rapidly raises the rams to load then power lift will kick in & lift the load effortlessly.

Tool Tray

Provides an easily accessible place for your tools or parts while working on a job.

Ram Lock-off Handles

An easy visual safety feature & allows for the independent use of the rams.

Spring Loaded Wheels

Can be used as an alternative to our standard Roller Wheels upon request or when a lower clearance is required.

Adapter Rack

Easily accessible storage rack for all the pit jack's adapters and extensions. Included with every jack.

+44(0)2476 613 223

info@autolift.co.uk

www.autolift.co.uk

AUTOLIFT LTD
VEHICLE JACKING SYSTEMS

CELEBRATING 1999 25TH 2024 ANNIVERSARY

MADE IN BRITAIN

Pit Jack Safety Features

All our pit jacks come with a triple layer of safety features built-in as standard;

1. **Safety Lowering Valve**
2. **Hose anti-burst valve in each ram in the event of a hose failure.**
3. **Ram lock-off handles (also allow for individual use of the rams)**

Security Struts – *Simple, Efficient & Safe*

Security Struts (equates to 'screw lock threaded ram' alternative used by other manufacturers) can be added to all Autolift pit jacks as an optional extra.

These can be easily retrofitted to our new Adjustable Style pit jack in the pit on-site with minimal downtime.

Once the desired lifting height is reached the pins are placed through the lowest hole and will stop the rams being lowered.

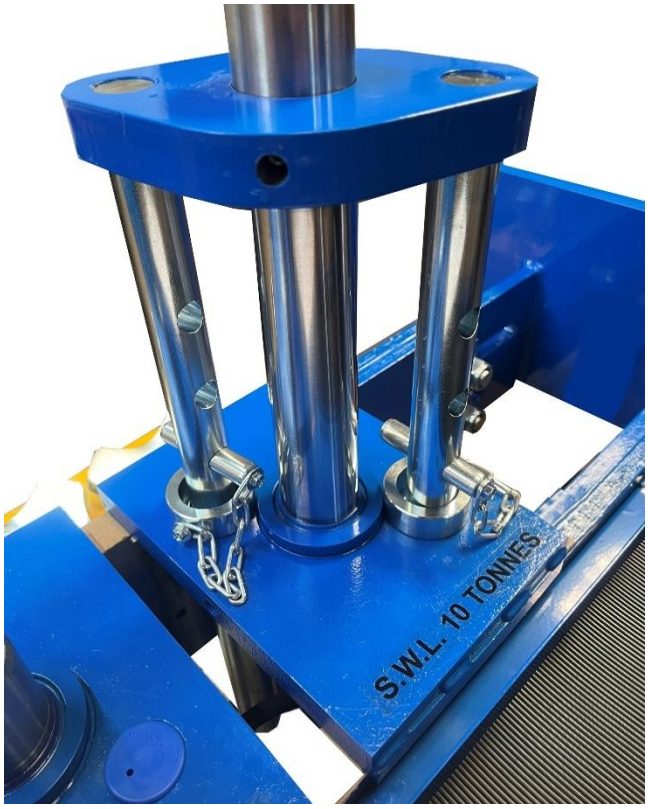

Benefits of our Security Strut mechanism compared to the 'Screw Lock' alternative are;

- **Quicker to insert and remove pins.**
- **Keeping the ram unit sealed ensures no water (causing rust) or debris can enter the sealed unit, and therefore the ram doesn't need to be re-sealed regularly meaning less downtime and lower maintenance costs.**
- **No threads on the rams so no chance of them becoming blocked with muck or damaged thus rendering the safety mechanism defunct & therefore unused by the user.**

+44(0)2476 613 223

info@autolift.co.uk

www.autolift.co.uk

AUTOLIFT LTD
VEHICLE JACKING SYSTEMS

CELEBRATING 1999 25TH 2024 ANNIVERSARY

MADE IN BRITAIN

Twin Ram Pit Jacks

WARRANTY 5 YEAR WARRANTY

Product Specification

- **Fully adjustable frame (see table below)**
- **400mm lifting stroke**
- **Full lateral ram movement for precise adjustment**
- **Our unique air-over-oil design which increases the longevity of the rams as well as maintaining the quick retraction speed of the rams, year after year.**
- **Control valves give precise and controlled lowering**
- **Available in 13, 20, 30 & 40 Tonne lifting capacity**
- **Air operated**
- **5 Year Warranty**

The range of adjustment for each frame size is;

Size	Pit Min	Pit Max
Small	750mm	1030mm
Medium	860mm	1160mm
Large	1110mm	1410mm

Autolift Twin Ram Pit Jacks are approved for VOSA ATF / MOT dedicated test lanes.

20 Tonne Adjustable Twin Ram Pit Jack

+44(0)2476 613 223

info@autolift.co.uk

www.autolift.co.uk

AUTOLIFT LTD
VEHICLE JACKING SYSTEMS

CELEBRATING 1999 25TH 2024 ANNIVERSARY

MADE IN BRITAIN

Heavy Duty Twin Ram Pit Jacks

Like our flagship 20T Twin Ram Pit Jack, our larger capacity models are expertly designed and manufactured to the same exacting standards, incorporating the advanced safety features, build quality and innovative design that Autolift customers have come to expect.

Designed for the toughest working environments, these heavy-duty jacks provide the strength and durability required for quarry, mining, military, railway, airport ground support and other heavyweight vehicle applications.

30 TONNE ADJUSTABLE PIT JACK

30 Tonne Twin Ram Pit Jack

- **Fully adjustable frame**
- **400mm lifting stroke**
- **Full lateral ram movement for precise adjustment**
- **Control valves give precise and controlled lowering**
- **Air operated**
- **5 Year Warranty**

40 Tonne Twin Ram Pit Jack

- **Bespoke made to suit your pit**
- **400mm lifting stroke**
- **Full lateral ram movement for precise adjustment**
- **Control valves give precise and controlled lowering**
- **Air operated**
- **5 Year Warranty**

40 TONNE PIT JACK

+44(0)2476 613 223

info@autolift.co.uk

www.autolift.co.uk

AUTOLIFT LTD
VEHICLE JACKING SYSTEMS

CELEBRATING 1999 25TH 2024 ANNIVERSARY

MADE IN BRITAIN

Pit Jack Accessories

All our twin ram pit jacks come with as standard - 2x 125mm Extensions, 2x Vee Head Adapters, 2x Dish Head Pansies

Standard Accessories

Autolift offer a range of accessories for your pit jack to aid lifting different vehicles safely and more efficiently.

AL347	EXTENSION (125MM)
AL348	EXTENSION (200MM)
AL349	EXTENSION (250MM)
AL350	EXTENSION (300MM)
AL351	EXTENSION (350MM)
AL352	EXTENSION (400MM)
AL353	EXTENSION (500MM)
AL354	EXTENSION (550MM)

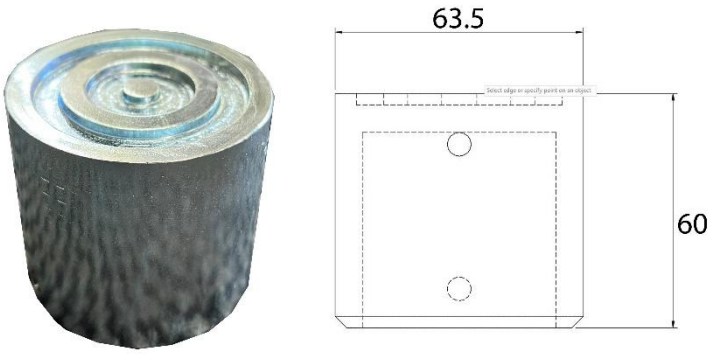

AL855 - RAM PROTECTOR

AL715 - CHASSIS ADAPTER

+44(0)2476 613 223

info@autolift.co.uk

www.autolift.co.uk

AUTOLIFT LTD
VEHICLE JACKING SYSTEMS

CELEBRATING 1999 25TH 2024 ANNIVERSARY

MADE IN BRITAIN

Spreader Beams

A Pit Jack Diff Beam Adapter (AL366) allows use of both rams to lift maximum loads at one point.

Safe working load 20 Tonnes.

13 TONNE TELESCOPIC SPREADER BEAM (AL585-TR)

Spreader Beams are designed to accommodate vehicles with independent front suspensions and also enables you to reach jacking points beyond the width of your pit.

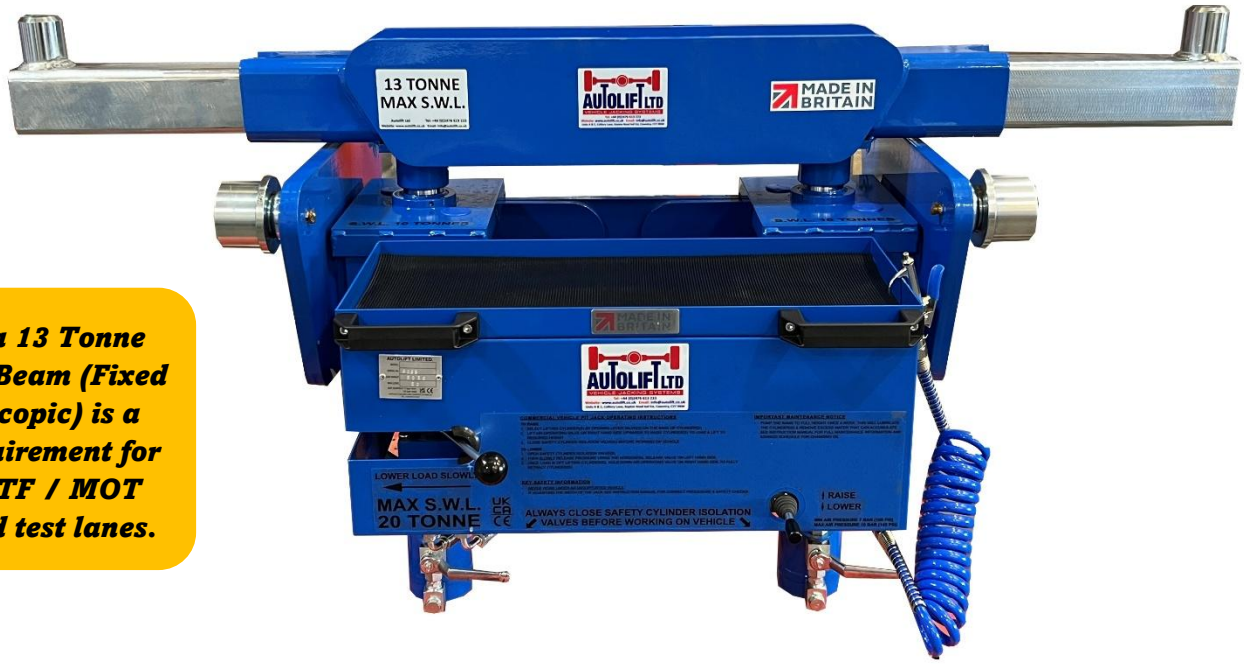

Having a 13 Tonne Spreader Beam (Fixed or Telescopic) is a legal requirement for VOSA ATF / MOT dedicated test lanes.

Pit must be a minimum of 780mm wide for rams to be able to spread far enough apart to fit the 13T Telescopic Spreader Beam on. Lifting points range 905mm fully closed to 1385mm fully extended.

+44(0)2476 613 223

info@autolift.co.uk

www.autolift.co.uk

AUTOLIFT LTD
VEHICLE JACKING SYSTEMS

CELEBRATING 1999 25TH 2024 ANNIVERSARY

MADE IN BRITAIN

Spreader Beams

13 TONNE FIXED SPREADER BEAM (AL436-TR)

This is an alternative to the Telescopic Spreader beam.

Pit must be a minimum of 800mm wide for rams to be able to spread far enough apart to fit the 13T Fixed Spreader Beam on.

Lifting points range from 660mm to 1270mm.

2.8 TONNE TELESCOPIC SPREADER BEAM (AL427)

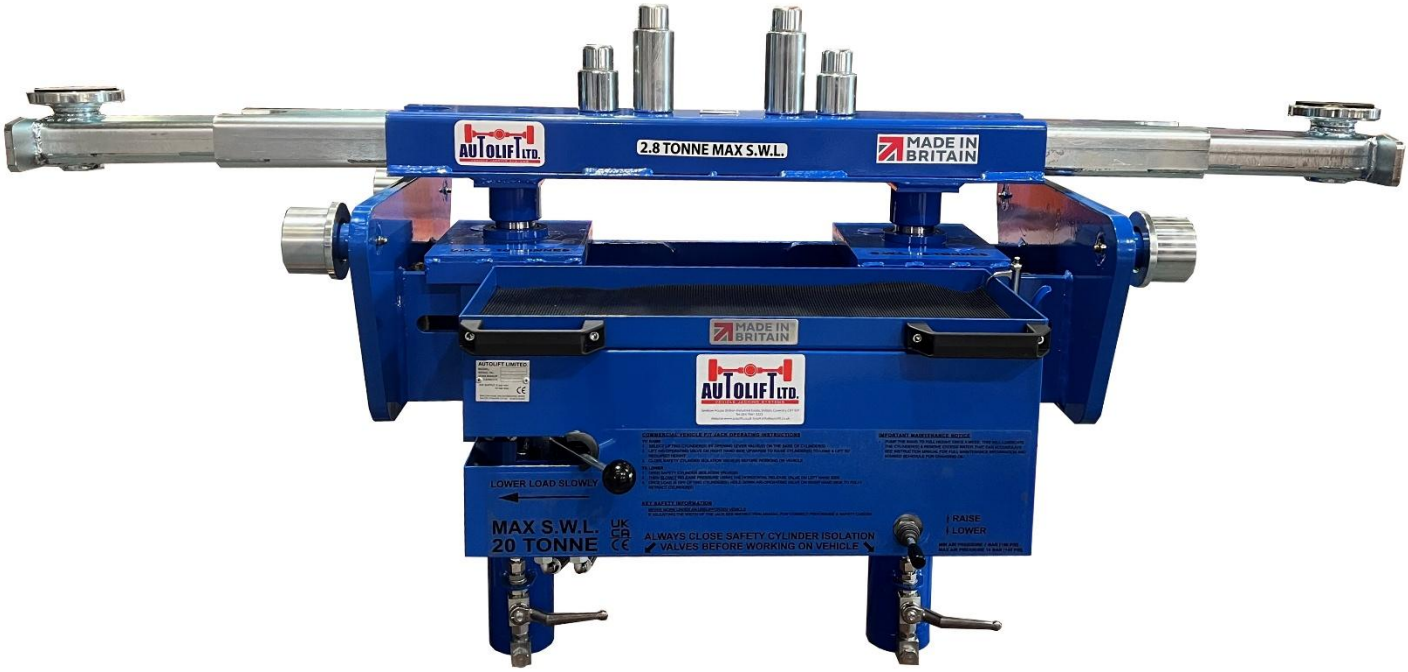

This spreader beam is intended for cars and light commercial vehicles with axle loads up to 2.8T.

Pit must be a minimum of 800mm wide for rams to be able to spread far enough apart to fit the Spreader Beam on. Lifting points range from 870mm to 1620mm.

+44(0)2476 613 223

info@autolift.co.uk

www.autolift.co.uk

AUTOLIFT LTD
VEHICLE JACKING SYSTEMS

CELEBRATING 1999 25TH 2024 ANNIVERSARY

MADE IN BRITAIN

Pit Survey Form

PIT SURVEY FORM QR CODE

A pit survey form is required to enable Autolift to supply a pit jack. Follow the QR code or visit our website for a printable copy – www.autolift.co.uk

If you have any questions regarding the measurements please contact us – we are here to help!

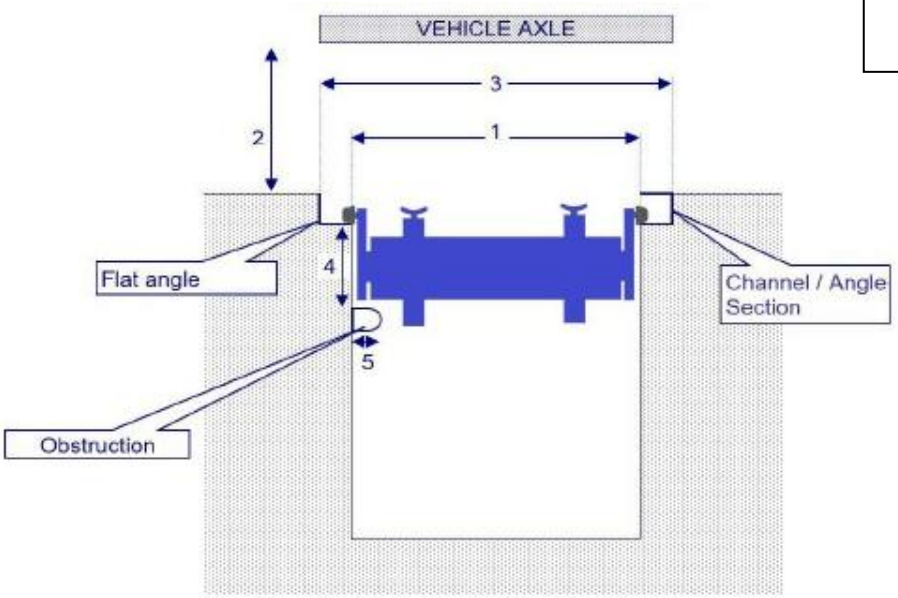

The information requested on this form is required to enable Autolift to supply a pit jack to you. It will allow your pit jack will fit into your pit and be operational within minutes of being delivered.

Pit / Customer Reference :-

1	Width of pit, check this along the length of your pit at this point between pit rails, at 1 metre intervals as indicated on diagram	max
		min
2	Height between the underside of the lowest vehicle and floor level	
3	Width inside vertical flanges of the pit rails, at 1 metre intervals as indicated on diagram.	max
		min
4	Distance down from the rail bottom to the top edge of any protrusion from the pit wall	left side
		right side
5	Distance from the pit wall that any protrusion intrudes into the pit	left side
		right side
6	Specify if rails are Angle or Channel (Mention if tapered)	
7	Internal dimensions of Angle or Channel	width
		height

Please advise of any information you think may be relevant not covered

+44(0)2476 613 223

info@autolift.co.uk

www.autolift.co.uk

AUTOLIFT LTD
VEHICLE JACKING SYSTEMS

CELEBRATING 1999 25TH 2024 ANNIVERSARY

MADE IN BRITAIN

Commercial Lift Mounted Jacking Beams

Lift Mounted Jack

- **Bespoke made to suit your lift**
- **170mm lifting stroke**
- **Full lateral ram movement for precise adjustment**
- **Control valves give precise and controlled lowering**
- **Includes all standard safety features**
- **Each jack comes with; 2x 200mm Extensions, 2x Vee Head Adapters & 2x Dish Head Pansies.**
- **Air operated**
- **5 Year Warranty**

Accessories Included

Options of Lift Mounted Jacking Beams

- **13 Tonne Lift Mounted Jacking Beam**
- **15 Tonne Lift Mounted Jacking Beam**

Bespoke Ends

We can manufacture special end/wheel systems to suit your lift.

LIFT SURVEY FORM QR CODE

+44(0)2476 613 223

info@autolift.co.uk

www.autolift.co.uk

AUTOLIFT LTD
VEHICLE JACKING SYSTEMS

CELEBRATING 1999 25TH 2024 ANNIVERSARY

MADE IN BRITAIN

1.5 Tonne Transmission Jack

Autolift manufacture an extremely popular 1.5 Tonne Manual Vertical Transmission Jack with a large lifting stroke. They can be used to remove and install engines, gearboxes etc. and are flexible in their application – can be used in a pit or under post/column lifts. The jacks are designed and manufactured for long lasting reliability and ease of use.

Benefits of Autolift's 1.5T Transmission Jack

- **1.5 Tonne lifting capacity.**
- **Closed Height of 935mm**
- **Extended Height of 1945mm**
- **Suitable for pit widths of 800mm minimum**
- **Universal Top Plate for different gearboxes.**
- **Adjustable quadrants & ratchet straps supplied for providing stability to the load.**
- **2-way Tilt-and-turn adjustable headplate for precise positioning.**
- **They are made to be used easily and safely by one mechanic.**
- **Heavy Duty base for extra stability.**
- **High Quality Castor wheels with brakes allowing the unit to be easily moved.**
- **Conforms to UKCA / CE Regulations**

+44(0)2476 613 223

info@autolift.co.uk

www.autolift.co.uk

AUTOLIFT LTD
VEHICLE JACKING SYSTEMS

CELEBRATING 1999 25TH 2024 ANNIVERSARY

MADE IN BRITAIN

Single Ram Pit Jacks

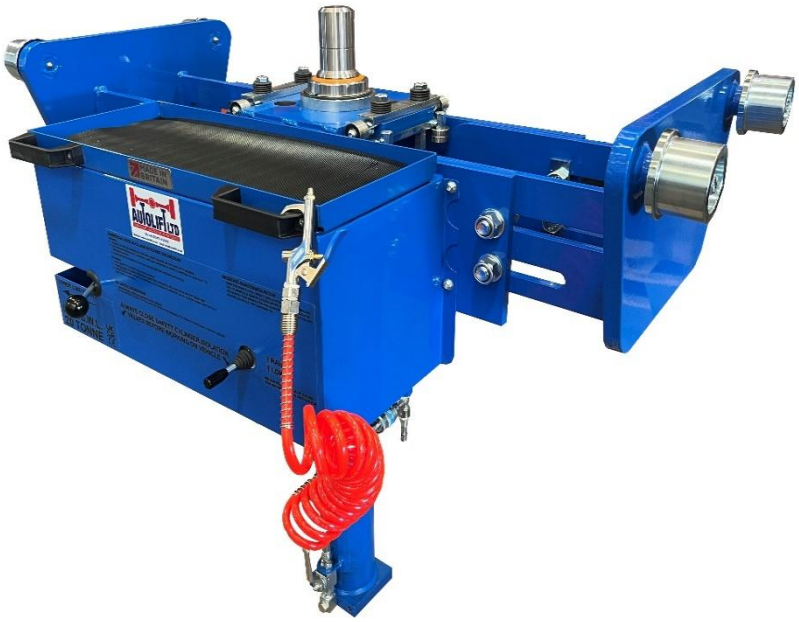

Adjustable Single Ram Pit Jack with 750mm Lifting Stroke

Autolift offer a range of Single Ram Pit jacks with a range of stroke lengths and lifting capacities. Our new adjustable frame design has been implemented on our Single Ram models (See table below for range of adjustment).

All the Single Ram pit jacks come with the same safety features as the Twin Ram models. All Single Ram models can be fitted with our optional extra 'Security Strut' mechanical locking system.

The range of adjustment for each frame size is;

Size	Pit Min	Pit Max
Small	750mm	1030mm
Medium	860mm	1160mm
Large	1110mm	1410mm

Optional Safety Strut Mechanism on the 750mm Stroke Single Ram Jack

Options of Single Ram Pit Jacks

- **15 Tonne Adjustable Single Ram Pit Jack (750mm Stroke)**
- **20 Tonne Adjustable Single Ram Pit Jack (750mm Stroke)**
- **15 Tonne Adjustable Single Ram Pit Jack (400mm Stroke)**
- **20 Tonne Adjustable Single Ram Pit Jack (400mm Stroke)**

13 Tonne Telescopic & Fixed Spreader Beams are available for all our Single Ram Jacks. (*Adapters not included*)

13T Telescopic Spreader (AL585-SR)

+44(0)2476 613 223

info@autolift.co.uk

www.autolift.co.uk

AUTOLIFT LTD
VEHICLE JACKING SYSTEMS

CELEBRATING 1999 25TH 2024 ANNIVERSARY

MADE IN BRITAIN

Heavy Duty Floor Jack

Autolift offers a versatile Floor Jack with 750mm lifting stroke and is available with a 15 or 20 Tonne lifting capacity. It has a minimum height of 1200mm & maximum height of 2000mm.

The lifting cylinder is mounted in an 800 mm square sprung base and is easily moved on 4 castors. On loads above 600 kg the castors retract, and the unit sits solidly & safely on the floor.

The Floor Jack is designed to run on the pit floor instead of a conventional jacking beam running on pit edge rails but can also be used on a garage floor for multiple applications.

Options of Floor Jacks

- **15 Tonne Floor Jack (750mm Stroke)**
- **20 Tonne Floor Jack (750mm Stroke)**

Autolift's floor jack comes with a triple layer of safety features as standard – Safety Lowering Valve, anti-burst valve & ram lock-off handle. Our optional Extra 'Security Strut' mechanical locking mechanism can be fitted for an additional layer of safety.

13 Tonne Telescopic & Fixed Spreader Beams are available for Floor Jacks. (Adapters not included).

Security Strut mechanism

+44(0)2476 613 223

info@autolift.co.uk

www.autolift.co.uk

AUTOLIFT LTD
VEHICLE JACKING SYSTEMS

CELEBRATING 1999 25TH 2024 ANNIVERSARY

MADE IN BRITAIN

Servicing & Repair

Preventative Maintenance

Autolift can provide an annual service inspection of your jack, or more regularly if preferred. We can also recommend third party agents in your area who are fully authorised & experienced working on our equipment.

Conducting an annual inspection/service not only increases the working lifespan, maintains performance and safety features of the equipment but also catches any issues prior to the legally required annual LOLER inspection (we do not conduct LOLER's).

LOLER

(Lifting Operations and Lifting Equipment Regulations 1998)

Under LOLER regulations it is a legal requirement for the annual testing of your lifting equipment. Preventative maintenance reduces downtime and likelihood of test failure.

10T Ram (AL36)

The components that work the hardest on a jack are; the Rams, Pump Block & Air Motor. We can offer immediate dispatch on these parts and most of our range, therefore keeping your business running with minimal downtime.

Pump Block (AL158)

Air Motor (AL574)

Repair & Remanufacture

For jacks that; have been in service a long time, see very heavy usage or have been damaged – customers can, by prior arrangement, have the jack returned to us for a complete overhaul.

Autolift would do a full evaluation of the jack and provide a quote with our recommendations for authorisation prior to any works are carried out.

+44(0)2476 613 223

info@autolift.co.uk

www.autolift.co.uk

AUTOLIFT LTD
VEHICLE JACKING SYSTEMS

CELEBRATING 1999 25TH 2024 ANNIVERSARY

MADE IN BRITAIN

olmec | AUTOLIFT LTD VEHICLE JACKING SYSTEMS

Autolift is the Preferred UK supplier of olmec Garage Equipment

OLMEC is based in Italy's renowned Motor Valley and has over 55 years of experience in hydraulic and garage equipment solutions. The company designs and manufactures clamping cylinders, hydraulic power units with pneumatic and electric motors, hand pumps, valves, air-hydraulic and pneumatic jacks, bead breakers, and forklift jacks.

Olmec is ISO 9001 Certified and all equipment complies with the Machinery Directive 2006/42/EC

Engineered for performance, safety, and durability, the OLMEC range delivers professional lifting solutions designed to meet the most demanding applications across multiple industries with lifting capacities from 2 to 76.5 tons

Advanced safety features for total peace of mind:

- **Integrated safety valves to prevent overloads**
- **System designed to avoid load dropping in case of air pressure loss**
- **Double-drive "Poka-Yoke" control ensuring safe operation, with both hands on the handle and thumb activation**

All Olmec Equipment comes with a 24-month warranty

+44(0)2476 613 223

info@autolift.co.uk

www.autolift.co.uk

AUTOLIFT LTD
VEHICLE JACKING SYSTEMS

CELEBRATING 1999 25TH 2024 ANNIVERSARY

MADE IN BRITAIN

We are keen to hear from suitable organisations who may be interested in distributing our products. If you would like to become a distributor within the UK or abroad. Please contact us for further information.

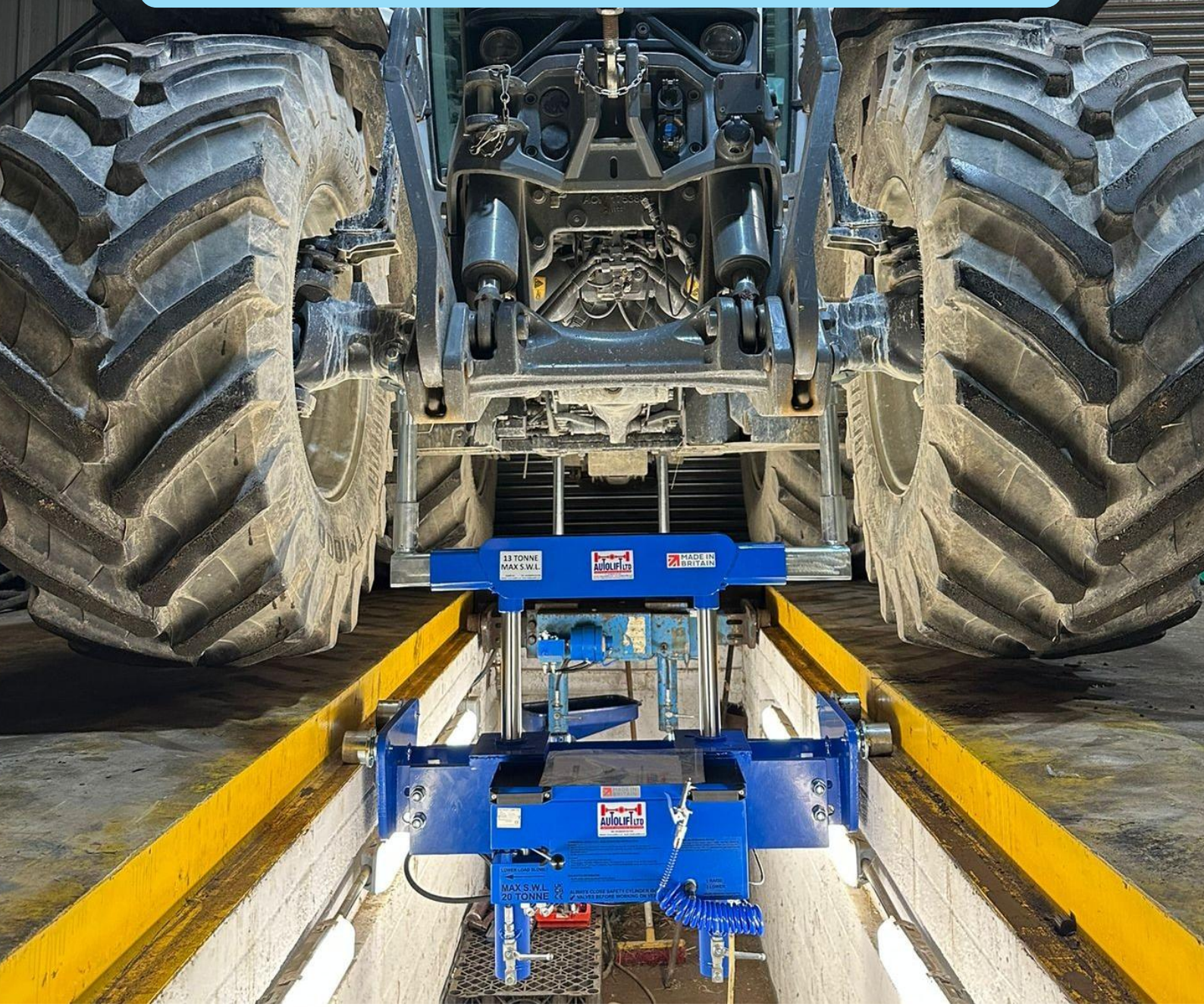

GEA GARAGE EQUIPMENT ASSOCIATION

MADE IN BRITAIN®

UK CA CE

Registered in England and Wales as: Autolift Limited

Company Number: 03789828

Autolift Ltd Units B & C, Colliery Lane, Bayton Road Ind Est, Coventry, CV7 9NW. UK.

Copyright © 2026 Autolift Limited. All rights reserved