Uniclass L2226			
CI/SfB	22.3	x	

October 2025

bushboard
WASHROOMS THAT WORK

Healthcare Brochure





We put the care into healthcare...

Over 15 years ago, we set out to deliver the best pre-plumbed system on the market utilising 90 years of experience, cutting edge technology, the highest quality materials and outstanding design.

Our idea was simple: a high quality pre-plumbed solution that conformed to stringent healthcare standards, delivered ready to install and requiring no on-site assembly.

Today, thousands of Bushboard RPM units are successfully in use every day in clinical environments across the UK.

Some completed projects:
Norfolk & Norwich University Hospital, Hythe & Dibden Memorial Hospital, St Helen's Hospital, Homerton Hospital, Warminster Hospital, Royal Albert Edward Infirmary, Worthing Hospital, Barnsley Hospital, Clatterbridge Cancer Centre, Royal Blackburn Hospital, Princess Royal Hospital, Maxillo Facial Surgery, Dewsbury & District Hospital.



HBN 00-10 Part C
A fully compliant solution

Since its introduction in 2002, RPM has rapidly become a first choice for specifiers because of innovative design, ease of installation and guaranteed standardised quality.

Units combine a carefully selected range of sanitaryware and brassware, fitted to panels and pre-assembled onto a specially designed pre-built rigid steel frame or seamless SGL box.

Working with a number of leading sanitaryware and brassware suppliers, we have the flexibility to provide a range of ready plumbed solutions to suit any budget. Utilising our expertise to ensure every unit is manufactured to the highest standards, and fully compliant with HBN 00-10.

SanCeram · Armitage Shanks · KWC DVS · Deva · Ideal Standard



Benefits of choosing Ready Plumbed Modules

Bushboard Ready Plumbed Modules are delivered factory pressure tested and ready to install. Units are simply and easily secured to the wall and services connected. RPM requires no pre-built timber frame and a single trade can complete the installation of an individual unit in as little as 20 minutes, resulting in substantial time and cost savings.

Guaranteed quality: factory engineered using standardised processes and the latest manufacturing technology to deliver an exceptionally high quality, durable product.

Improved Infection control: precision manufactured from the highest quality materials to minimise dirt trap and deliver ease of maintenance and cleaning.

Compliance: units are fully compliant with stringent healthcare regulations including HBN 00-10.

Reduced time: each unit can be installed in as little as 20 minutes by a single trade resulting in substantial time and cost savings.

Improved cost control: one product delivered from one source, ensures greater predictability of cost and programming, resulting in substantial time and cost savings.

Improved sustainability: reduces the impact of construction activities on-site, including noise, vehicle movements and waste reduction.

Utilisation of off-site skills: removes the interface between joinery and plumbing trades reducing reliance on skilled labour on-site.

Reduced accidents: transferring work off site into our controlled production environment reduces site health and safety issues.

Testing off-site: delivered pressure tested ready to install.

Delivery and distribution: delivered palletised for ease of handling and distribution on site.

Regulations and standards: the following measures apply to all Bushboard Healthcare RPM units to ensure they meet the stringent regulations relating to plumbing:

- Products used are WRAS listed or self-certified compliant.
- TMV3 approved thermostatic mixer valves.
- All units are pressure tested for leakage.
- Brass fittings are DZR grade.



Access Options

Our Healthcare range consists of two unit styles available in various configurations with a range of sanitary assemblies. Both meet stringent healthcare regulatory demands for an 'impervious, smooth and seamless' finish. Suitable for most clinical applications to conceal services supplied through wall, floor or ceiling.

Traditional Access

Our original healthcare unit has a traditional design featuring large access panels on a steel rigid frame with aluminium corner extrusions providing extra protection.

Panels are available in Solid Grade Laminate or High Pressure Laminate and available hinged and lockable to allow wide access points to services behind. The unit is fitted quickly and simply to the wall using brackets and secured with tie back rods.

Trust System

Our Trust System is fabricated from Solid Grade Laminate with aluminium corner extrusions creating a flush fronted, seamless design.

The system has hinged and lockable access hatches with neoprene hygiene seals. It is fitted quickly using toggles to click simply into provided wall channels with secure tie back rods for added strength.

Look for the Traditional Frame and Trust System icons throughout this brochure.
Both units are fully compliant to HBN regulations but the key difference is:

Traditional
Frame

Panel access

Trust System
Frame

Hatch access

Bushboard Healthcare systems

Traditional
Frame

Boxed out units are the most frequently specified unit type and stand proud of a solid or partition walls to conceal services. They are ideal for both new and refurbishment projects.

Traditional Boxed Out Unit
Freestanding unit

1. Box unit
Factory assembled Solid Grade Laminate (SGL) box is impact resistant and 100% impervious to liquids. Variable depth to accommodate service requirements.

2. Corner extrusions
Flush fitted, smooth and easy to clean aluminium corner extrusions for protection of vulnerable edges and seamless joining of panels.

3. Wall fixing bracket
Wall fixing brackets secure box unit to wall quickly and easily.

4. Framing
Factory assembled galvanised steel frame with integral rail for cisterns and sanitaryware.

5. Panels
Two panel options for consideration – SGL and HPL. SGL is highly impact resistant, easy to clean, has no sharp edges and is 100% impervious to water. HPL with smooth post bond edges is highly durable, easy to clean and water resistant.

6. Panel lock
Anti-tamper lock secures directly through the frame for added security.

7. Hinges
90 degree opening top hinge for easy access to services.

8. Panel stay
Panel stay locks the panel in place while in operation.

9. Tie Backs
Threaded rods adjustable in two planes tie the unit to the wall.

10. Brassware
WRAS compliant brassware specifically chosen to meet the requirements of HBN 00-10 Part C. Units are tested for leakage in a controlled factory environment prior to delivery, ensuring no disruption on site.

11. Panel-dock system
Maintains constant panel alignment during installation and ongoing use.

12. Sanitaryware
A dedicated range of sanitaryware carefully selected to meet the requirements of HBN 00-10 Part C.

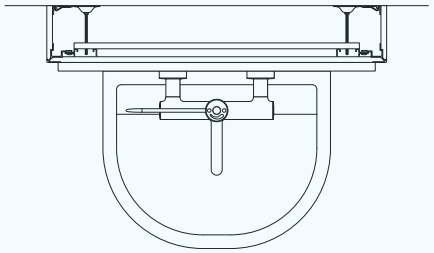

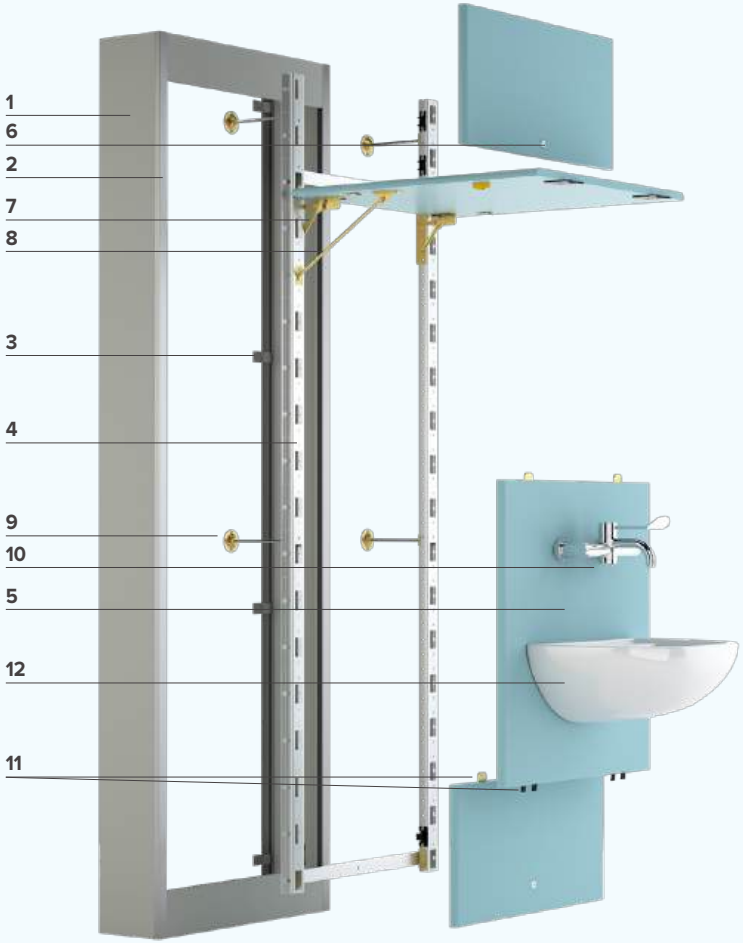

Additional Configuration Options

In addition to the freestanding unit, our Traditional Boxed Out Unit can be supplied to suit your requirements in a corner with extended flashgaps, aperture or duct wall system.

Boxed Out Units with extended flashgaps

Used where additional space is required.



Boxed out unit with extended flashgap panel in SGL

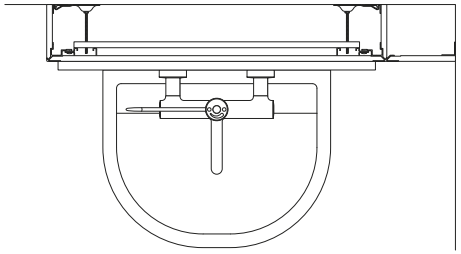

Aperture

Fits within a partition wall, with the frame finishing flush to the surface and using services supplied within the wall.



Extruded aluminium frame and panels

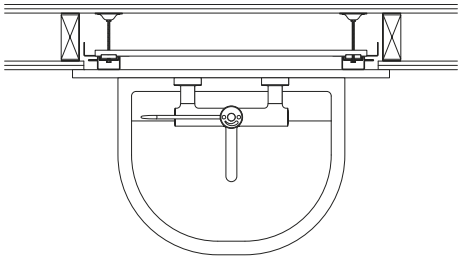

Duct wall system

Creates an entire wall duct where more complex configurations are required, making it ideal for disabled facilities and assisted areas.



Extruded aluminium frame and panels with flashgap panels in HPL or SGL and aluminium skirting in silver or charcoal

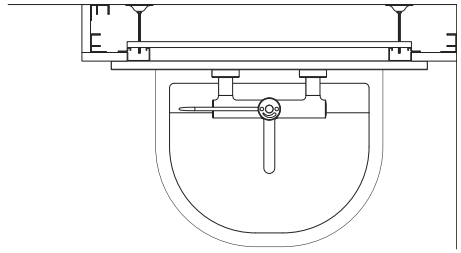

Bushboard Healthcare systems

Boxed out units are the most frequently specified unit type and stand proud of a solid or partition walls to conceal services. They are ideal for both new and refurbishment projects.

Trust System
Frame

Trust System
Freestanding unit

1. Trust box system
Factory assembled, flush fronted box fabricated from solid grade laminate. Impact resistant and 100% impervious to liquids. Variable depth to accommodate service requirements.

2. Aluminium channel
Aluminium full length channels fix the box securely to the wall for quick and easy installation.

3. Corner Extrusions
Flush fitted, smooth and easy to clean aluminium corner extrusions for protection of vulnerable edges and seamless joining of panels.

4. Tie backs
Threaded rod tie back system for extra, secure mounting.

5. Access hatch
Wide access hatches to services behind. Easy to clean surface and lockable with suited keys for security.

6. Hatch rebate
Rebated hatch doors means when closed a flush-fronted, seamless box is achieved.

7. Hinges
160 degree opening hinge for easy access to services.

8. Neoprene seal
Neoprene hygiene seal around door hatch to promote infection control.

9. Brassware
WRAS compliant brassware specifically chosen to meet the requirements of HBN 00-10 Part C. Units are tested for leakage in a controlled factory environment prior to delivery, ensuring no disruption on site.

10. Sanitaryware to suit specification
A dedicated range of sanitaryware carefully selected to meet the requirements of HBN 00-10 Part C.

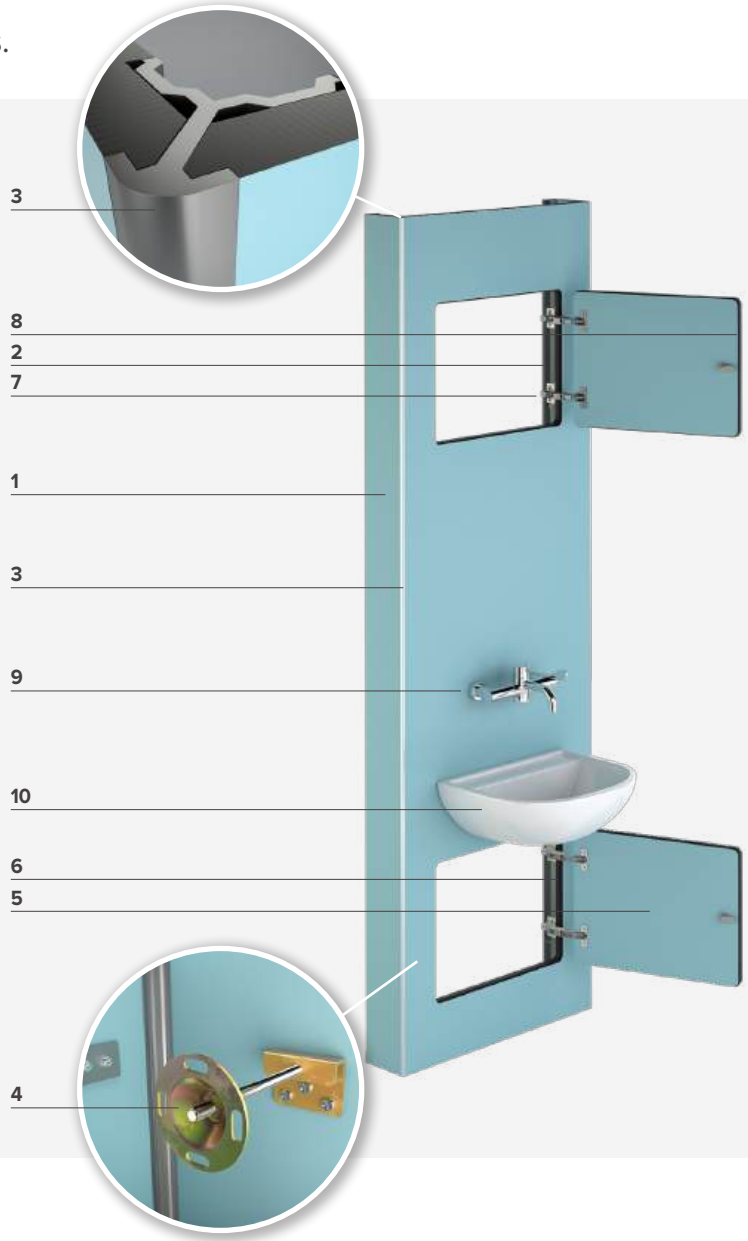

The maximum size of this unit is limited by sheet size.

Maximum width with two return ends: 1550mm
Maximum width with one return end: 1800mm

Maximum fixed ceiling height: 2780mm
Maximum suspended ceiling height: 2680mm
Depth: 150mm or 225mm

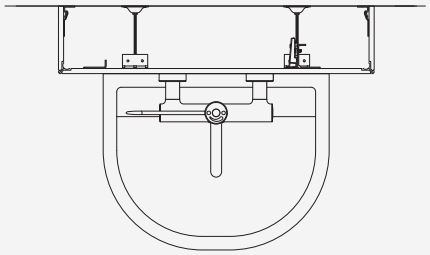

Additional Configuration Options

In addition to the freestanding unit we can supply our Trust System to suit your requirements in a corner or aperture.

Trust System Corner Box

Used where additional space is required.



Postformed boxed out unit with off-set hatches

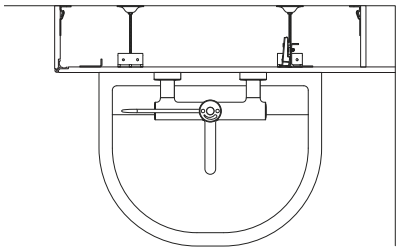

Aperture

Fits within a partition wall, with the Trust System finishing flush to the surface and using services supplied within the wall.



Trust System aperture unit with hatches

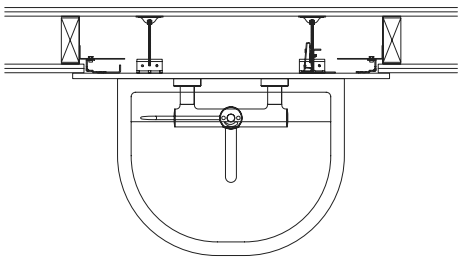

Trust Between Walls

Installed between two walls, the Trust System units are butted together to create a perfectly flush, continuous wall surface that accommodates multiple sanitaryware units.



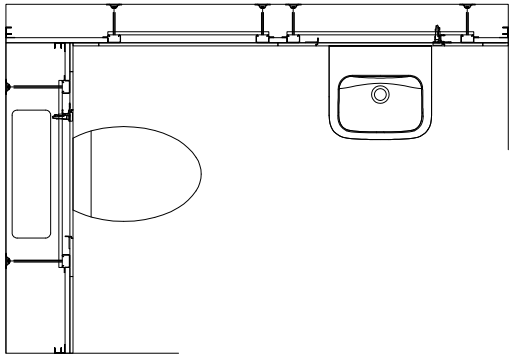

Trust System Between Walls with high security ensuite

Sanitary Assemblies



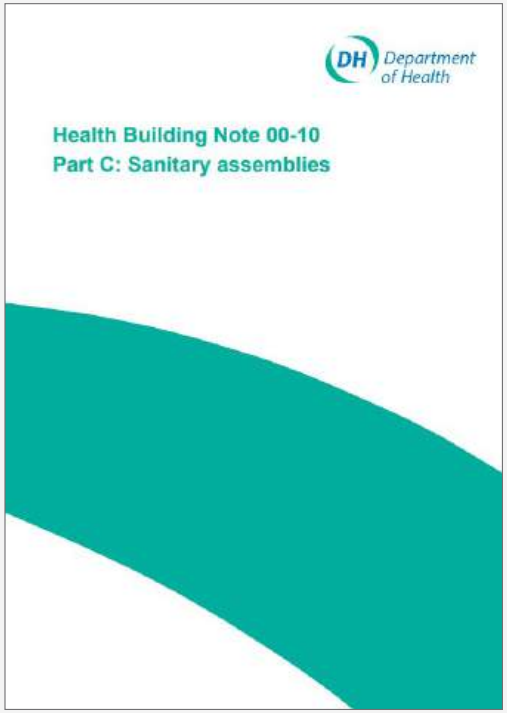

HBN 00-10 Part C
A fully compliant solution

A dedicated range of sanitary assemblies for healthcare environments, specifically selected to meet the requirements of HBN 00-10.

Drawing on years of expertise, we ensure HBN is at the forefront of our healthcare designs. Continuously developed over the years to keep up with industry standards, every healthcare unit specified with us is compliant, durable and safe for clinical environments.

Disposal unit assembly DU HS

For the disposal of liquid and solid waste in connection with clinical procedures

Traditional
Frame



CODE	PRODUCT DESCRIPTION	HBN REF
SSDUHSLHB or SSDUHSRHB	SanCeram 1600mm Disposal Unit and Drainer with L/H or R/H Sluice	
G22018L or G22018R	KWC DVS 1600mm Disposal Unit with L/H or R/H Drainer	DU HS
S3335MY or S3336MY	Armitage Shanks Dee Disposal with Unit L/H or R/H Drainer	

CODE	BRASSWARE OPTIONS	HBN REF
DLV095	Deva Panel Mounted Lever Action Bib Taps with 6" levers (pair) with ZQ5567XX wall extensions (single)	
2 no. AT07-049	KWC DVS Aquarius WM Panel Mounted Tap Spouts and AT07-011 Wave On/Off Sensors AT00-038 Conversion Kit to Copper Tails	TB H1
S8270AA	Armitage Shanks Markwik 21+ 1/2" lever action bib taps with B1686AA Nimbus 21 Concealed bib tap wall mount (pair) and B1684AA Nimbus 21 1/2" x 100mm bib tap extensions (pair)	

CODE	FLUSH OPTIONS
F3018	9L plastic cistern with chrome lever & B3022 plastic down pipe

Typical room applications

- Dirty utility/disposal

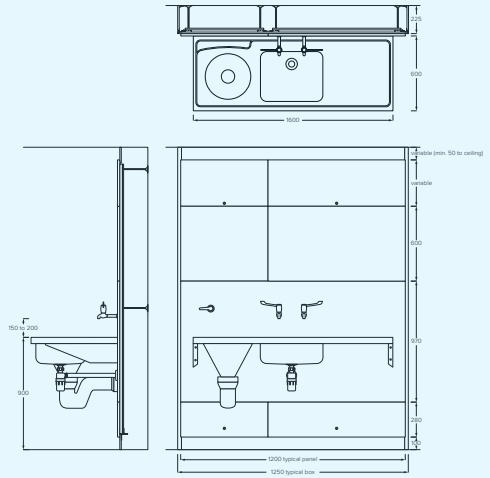

For a larger, detailed technical diagram please see page 55.

Disposal unit assembly DU HS

For the disposal of liquid and solid waste in connection with clinical procedures

Trust System
Frame



CODE	PRODUCT DESCRIPTION	HBN REF
SSDUHSLHB or SSDUHSRHB	SanCeram 1600mm Disposal Unit and Drainer with L/H or R/H Sluice	
G22018L or G22018R	KWC DVS 1600mm Disposal Unit with L/H or R/H Drainer	DU HS
S3335MY or S3336MY	Armitage Shanks Dee Disposal with Unit L/H or R/H Drainer	

CODE	BRASSWARE OPTIONS	HBN REF
DLV095	Deva Panel Mounted Lever Action Bib Taps with 6" levers (pair) with ZQ5567XX wall extensions (single)	
2 no. AT07-049	KWC DVS Aquarius WM Panel Mounted Tap Spouts and AT07-011 Wave On/Off Sensors AT00-038 Conversion Kit to Copper Tails	TB H1
S8270AA	Armitage Shanks Markwik 21+ 1/2" lever action bib taps with B1686AA Nimbus 21 Concealed bib tap wall mount (pair) and B1684AA Nimbus 21 1/2" x 100mm bib tap extensions (pair)	

CODE	FLUSH OPTIONS
F3018	9L plastic cistern with chrome lever & B3022 plastic down pipe

Typical room applications

- Dirty utility/disposal

NOTE: DU HS is available as a corner box only due to sheet size limitations as mentioned on page 8.

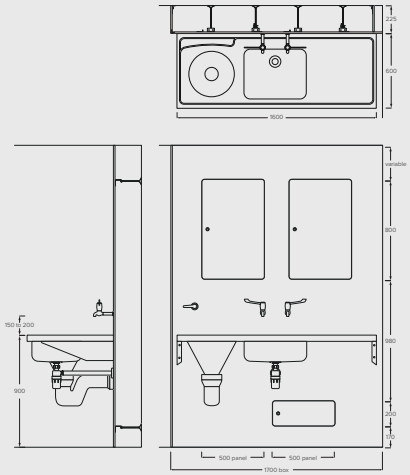

For a larger, detailed technical diagram please see page 55.

Disposal unit assembly DU H

For the disposal of liquid and solid waste in connection with clinical procedures

Traditional
Frame



CODE	PRODUCT DESCRIPTION	HBN REF
SSDUHLHB or SSDUHRHB	SanCeram 1000mm Disposal Unit and Drainer with L/H or R/H Sluice	
G22016L or G22016R	KWC DVS 1000mm Disposal Unit with L/H or R/H Drainer	DU H
S6563MY	Armitage Shanks Stirling 1000mm Disposal Unit with R/H drainer	

CODE	BRASSWARE OPTIONS	HBN REF
DLV095	Deva Panel Mounted Lever Action Bib Taps with 6" levers (pair) with ZQ5567XX wall extensions (single)	
2 no. AT07-049	KWC DVS Aquarius WM Panel Mounted Tap Spouts and AT07-011 Wave On/Off Sensors AT00-038 Conversion Kit to Copper Tails	TB H1
S8270AA	Armitage Shanks Markwik 21+ 1/2" lever action bib taps with B1686AA Nimbus 21 Concealed bib tap wall mount (pair) and B1684AA Nimbus 21 1/2" x 100mm bib tap extensions (pair)	

CODE	FLUSH OPTIONS
F3018	9L plastic cistern with chrome lever & B3022 plastic down pipe

Typical room applications

- Dirty utility/disposal

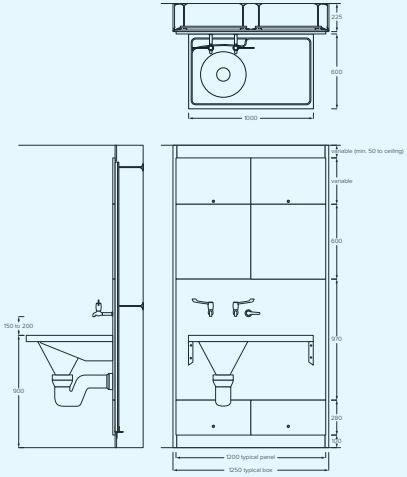

For a larger, detailed technical diagram please see page 56.

Disposal unit assembly DU H

For the disposal of liquid and solid waste in connection with clinical procedures

Trust System
Frame

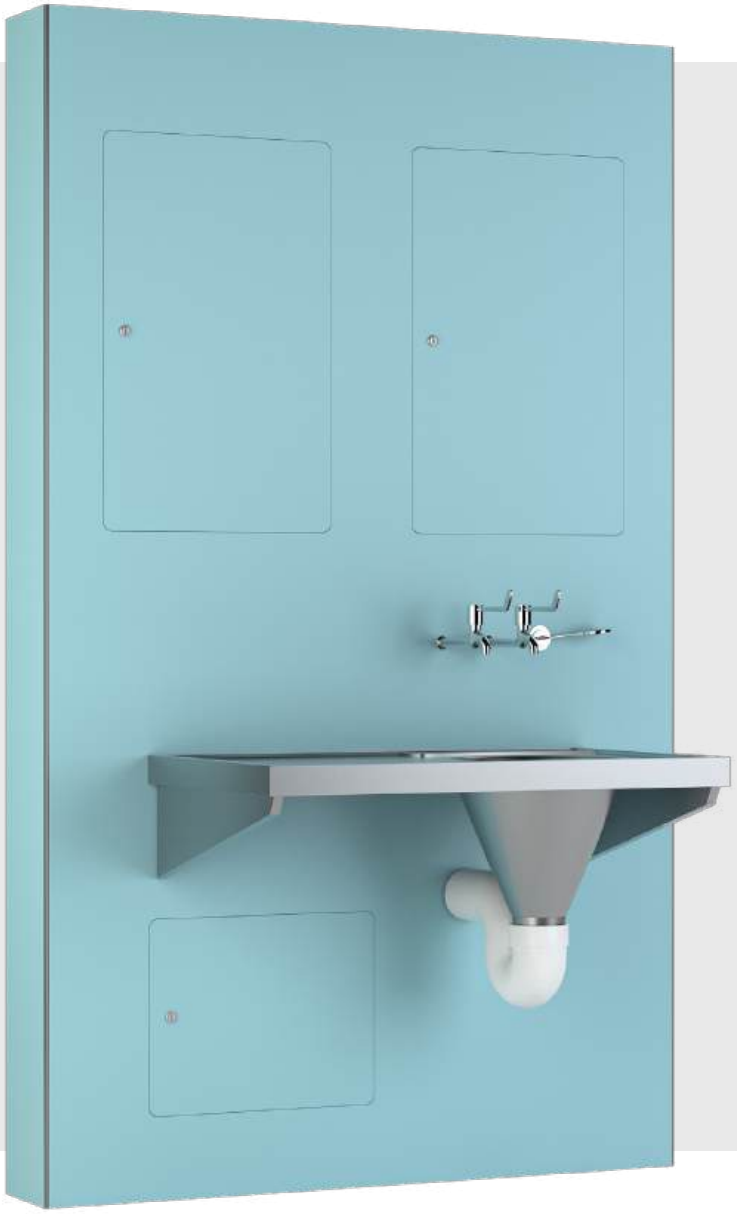

CODE	PRODUCT DESCRIPTION	HBN REF
SSDUHLHB or SSDUHRHB	SanCeram 1000mm Disposal Unit and Drainer with L/H or R/H Sluice	
G22016L or G22016R	KWC DVS 1000mm Disposal Unit with L/H or R/H Drainer	DU H
S6563MY	Armitage Shanks Stirling 1000mm Disposal Unit with R/H drainer	

CODE	BRASSWARE OPTIONS	HBN REF
DLV095	Deva Panel Mounted Lever Action Bib Taps with 6" levers (pair) with ZQ5567XX wall extensions (single)	
2 no. AT07-049	KWC DVS Aquarius WM Panel Mounted Tap Spouts and AT07-011 Wave On/Off Sensors AT00-038 Conversion Kit to Copper Tails	TB H1
S8270AA	Armitage Shanks Markwik 21+ 1/2" lever action bib taps with B1686AA Nimbus 21 Concealed bib tap wall mount (pair) and B1684AA Nimbus 21 1/2" x 100mm bib tap extensions (pair)	

CODE	FLUSH OPTIONS
F3018	9L plastic cistern with chrome lever & B3022 plastic down pipe

Typical room applications

- Dirty utility/disposal

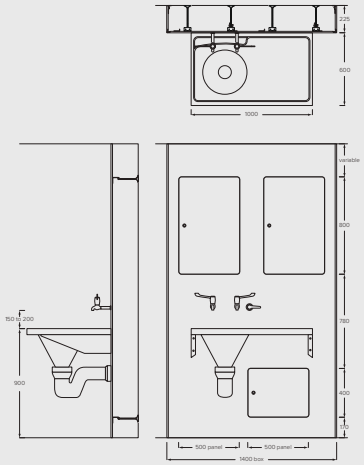

For a larger, detailed technical diagram please see page 56.

Disposal unit assembly DU

For the disposal of liquid and solid waste in connection with clinical procedures

Traditional
Frame



CODE	PRODUCT DESCRIPTION	HBN REF
SSDUB or SSDUGB	SanCeram 600mm Disposal Unit with or without Grate	DU
G22041N	KWC DVS 600mm Disposal Hopper	

CODE	BRASSWARE OPTIONS	HBN REF
DLV095	Deva Panel Mounted Lever Action Bib Taps with 6" levers (pair) with ZQ5567XX wall extensions (single)	
2 no. AT07-049	KWC DVS Aquarius WM Panel Mounted Tap Spouts and AT07-011 Wave On/Off Sensors AT00-038 Conversion Kit to Copper Tails	TB H1
S8270AA	Armitage Shanks Markwik 21+ 1/2" lever action bib taps with B1686AA Nimbus 21 Concealed bib tap wall mount (pair) and B1684AA Nimbus 21 1/2" x 100mm bib tap extensions (pair)	

CODE	FLUSH OPTIONS
F3018	9L plastic cistern with chrome lever & B3022 plastic down pipe

Typical room applications

- Dirty utility/disposal

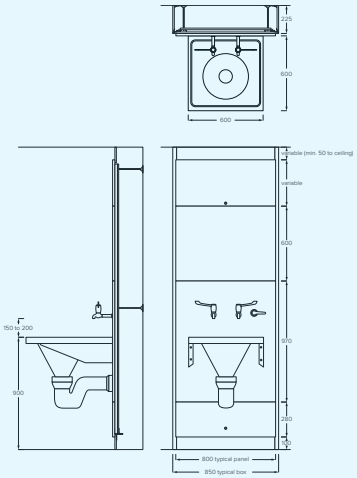

For a larger, detailed technical diagram please see page 57.

Disposal unit assembly DU

For the disposal of liquid and solid waste in connection with clinical procedures

Trust System
Frame



CODE	PRODUCT DESCRIPTION	HBN REF
SSDUB or SSDUGB	SanCeram 600mm Disposal Unit with or without Grate	DU
G22041N	KWC DVS 600mm Disposal Hopper	

CODE	BRASSWARE OPTIONS	HBN REF
DLV095	Deva Panel Mounted Lever Action Bib Taps with 6" levers (pair) with ZQ5567XX wall extensions (single)	
2 no. AT07-049	KWC DVS Aquarius WM Panel Mounted Tap Spouts and AT07-011 Wave On/Off Sensors AT00-038 Conversion Kit to Copper Tails	TB H1
S8270AA	Armitage Shanks Markwik 21+ 1/2" lever action bib taps with B1686AA Nimbus 21 Concealed bib tap wall mount (pair) and B1684AA Nimbus 21 1/2" x 100mm bib tap extensions (pair)	

CODE	FLUSH OPTIONS
F3018	9L plastic cistern with chrome lever & B3022 plastic down pipe

Typical room applications

- Dirty utility/disposal

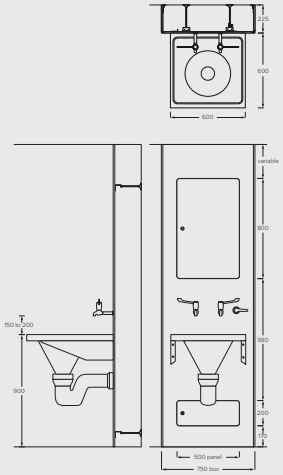

For a larger, detailed technical diagram please see page 57.

Plaster sink assembly PS H

For use in connection with plaster preparation

Traditional
Frame



CODE	PRODUCT DESCRIPTION	HBN REF
SSPSLH or SSPSRH	SanCeram 1200mm Plaster Sink L/H or R/H Drainer	PS H
G22000L or G22000R	KWC DVS 1200mm Plaster Sink with L/H or R/H Drainer	
S1267MY or S1268MY	Armitage Shanks Clyde 1200mm Plaster Sink with L/H or R/H Drainer	

CODE	BRASSWARE OPTIONS	HBN REF
DLV095	Deva Panel Mounted Lever Action Bib Taps with 6" levers (pair) with ZQ5567XX wall extensions (single)	TB H1
2 no. AT07-049	KWC DVS Aquarius WM Panel Mounted Tap Spouts and AT07-011 Wave On/Off Sensors AT00-038 Conversion Kit to Copper Tails	
S8270AA	Armitage Shanks Markwik 21+ 1/2" lever action bib taps with B1686AA Nimbus 21 Concealed bib tap wall mount (pair) and B1684AA Nimbus 21 1/2" x 100mm bib tap extensions (pair)	

Typical room applications

- Plaster application

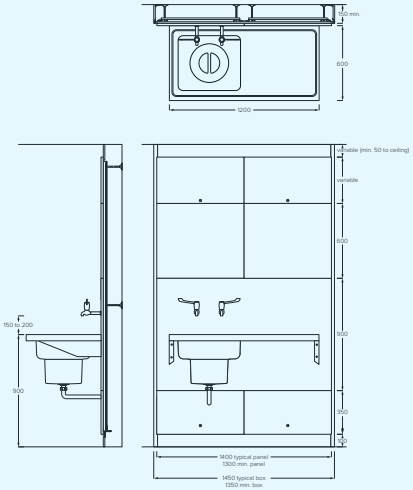

For a larger, detailed technical diagram please see page 58.

Plaster sink assembly PS H

For use in connection with plaster preparation

Trust System
Frame



CODE	PRODUCT DESCRIPTION	HBN REF
SSPSLH or SSPSRH	SanCeram 1200mm Plaster Sink L/H or R/H Drainer	PS H
G22000L or G22000R	KWC DVS 1200mm Plaster Sink with L/H or R/H Drainer	
S1267MY or S1268MY	Armitage Shanks Clyde 1200mm Plaster Sink with L/H or R/H Drainer	

CODE	BRASSWARE OPTIONS	HBN REF
DLV095	Deva Panel Mounted Lever Action Bib Taps with 6" levers (pair) with ZQ5567XX wall extensions (single)	TB H1
2 no. AT07-049	KWC DVS Aquarius WM Panel Mounted Tap Spouts and AT07-011 Wave On/Off Sensors AT00-038 Conversion Kit to Copper Tails	
S8270AA	Armitage Shanks Markwik 21+ 1/2" lever action bib taps with B1686AA Nimbus 21 Concealed bib tap wall mount (pair) and B1684AA Nimbus 21 1/2" x 100mm bib tap extensions (pair)	

Typical room applications

- Plaster application

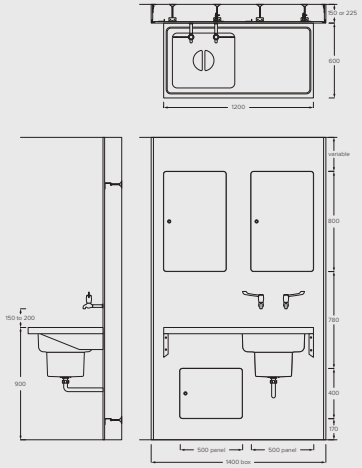

For a larger, detailed technical diagram please see page 58.

Janitorial unit JU

Traditional
Frame



CODE	PRODUCT DESCRIPTION	HBN REF
SSJUHBN	SanCeram Janitorial Unit c/w monobloc tap	
G20050N	KWC DVS Janitorial Unit c/w Monobloc Tap	JU
S3339MY	Armitage Shanks Janitoral Unit c/w monobloc tap	

Typical room applications

- Cleaners' rooms

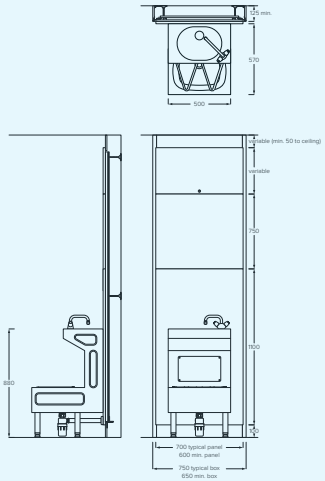

For a larger, detailed technical diagram please see page 59.

Janitorial unit JU

Trust System
Frame



CODE	PRODUCT DESCRIPTION	HBN REF
SSJUHBN	SanCeram Janitorial Unit c/w monobloc tap	JU
G20050N	KWC DVS Janitorial Unit c/w Monobloc Tap	
S3339MY	Armitage Shanks Janitoral Unit c/w monobloc tap	

Typical room applications

- Cleaners' rooms

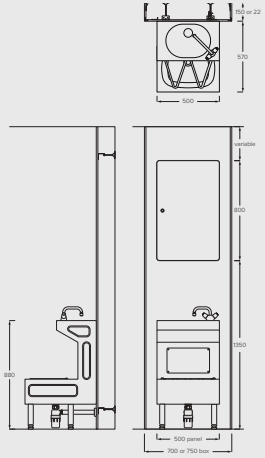

For a larger, detailed technical diagram please see page 59.

Scrub-up trough assemblies SU H1

For use in connection with surgical washing of forearms and hands

Traditional
Frame



CODE	PRODUCT DESCRIPTION	HBN REF
SSSUH1L or SSSUH1R	SanCeram 800mm Surgeon's Scrub Up Trough L/H or R/H Waste	SU H1
G22029L or G22029R	KWC DVS 800mm Single Scrub Up Trough L/H or R/H Outlet	
S1267MY or S1268MY	Armitage Shanks Clyde 1200mm Plaster Sink L/H or R/H Outlet	

CODE	BRASSWARE OPTIONS	HBN REF
SCBW122	SanCeram Thermostatic Sequential Panel Mounted Lever Action Tap TMV3 with Removable Spout	TB H2a
MT04-001	KWC DVS Manual AquariTherm Panel Mounted Lever Action Tap	
A6737AA	Armitage Shanks Markwik 21+ Panel Mounted Sensor Tap	
A6243AA	Armitage Shanks Markwik 21+ Thermostatic Sequential Panel Mounted Lever Action Tap TMV3	
SCBW123	SanCeram Thermostatic Panel Mounted Infrared Sensor Tap TMV3 (battery) with Removable Spout	TB H6
AT04-002	KWC DVS AquariTherm Panel Mounted Sensor Tap	
A6684AA	Armitage Shanks Markwik 21+ Thermostatic Panel Mounted Infrared Sensor Tap TMV3	

Typical room applications

- Theatres
- Scrub-up areas

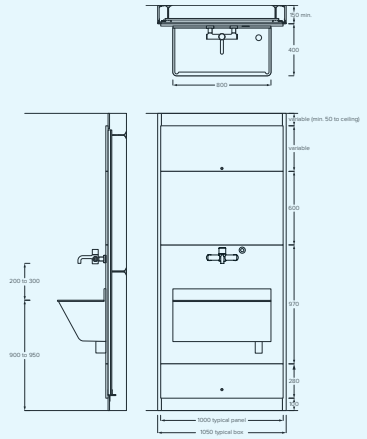

For a larger, detailed technical diagram please see page 60.

Scrub-up trough assemblies SU H1

For use in connection with surgical washing of forearms and hands

Trust System
Frame



CODE	PRODUCT DESCRIPTION	HBN REF
SSSUH1L or SSSUH1R	SanCeram 800mm Surgeon's Scrub Up Trough L/H or R/H Waste	SU H1
G22029L or G22029R	KWC DVS 800mm Single Scrub Up Trough L/H or R/H Outlet	
S1267MY or S1268MY	Armitage Shanks Clyde 1200mm Plaster Sink L/H or R/H Outlet	

CODE	BRASSWARE OPTIONS	HBN REF
SCBW122	SanCeram Thermostatic Sequential Panel Mounted Lever Action Tap TMV3 with Removable Spout	TB H2a
MT04-001	KWC DVS Manual AquariTherm Panel Mounted Lever Action Tap	
A6737AA	Armitage Shanks Markwik 21+ Panel Mounted Sensor Tap	
A6243AA	Armitage Shanks Markwik 21+ Thermostatic Sequential Panel Mounted Lever Action Tap TMV3	
SCBW123	SanCeram Thermostatic Panel Mounted Infrared Sensor Tap TMV3 (battery) with Removable Spout	TB H6
AT04-002	KWC DVS AquariTherm Panel Mounted Sensor Tap	
A6684AA	Armitage Shanks Markwik 21+ Thermostatic Panel Mounted Infrared Sensor Tap TMV3	

Typical room applications

- Theatres
- Scrub-up areas

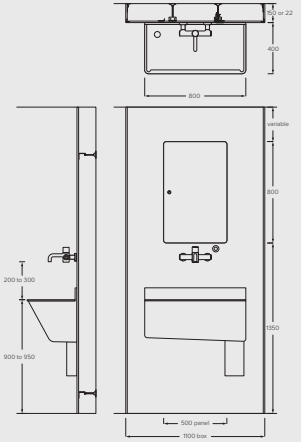

For a larger, detailed technical diagram please see page 60.

Scrub-up trough assemblies SU H2, SU H3

For use in connection with surgical washing of forearms and hands

Traditional
Frame



CODE	PRODUCT DESCRIPTION	HBN REF
SSSUH2L or SSSUH2R	SanCeram 1600mm Surgeon's Scrub Up Trough L/H or R/H Waste	SU H2
G22030L or G22030R	KWC DVS 1600mm Double Scrub Up Trough L/H or R/H Outlet	
S2873MY or S2874MY	Armitage Shanks Firth 1600mm Double Scrub up Trough L/H or R/H Outlet	
SSSUH3L or SSUH3R	SanCeram 2400mm Surgeon's Scrub Up Trough L/H or R/H Waste	SU H3
G22031L or G22031R	KWC DVS 2400mm Double Scrub Up Trough L/H or R/H Outlet	
S2876MY or S2877MY	Armitage Shanks Firth 2400mm Triple Scrub-Up Trough L/H or R/H Outlet	

CODE	BRASSWARE OPTIONS	HBN REF
SCBW122	SanCeram Thermostatic Sequential Panel Mounted Lever Action Tap TMV3 with Removable Spout	TB H2a
MT04-001	KWC DVS Manual AquariTherm Panel Mounted Lever Action Tap	
A6737AA	Armitage Shanks Markwik 21+ Panel Mounted Sensor Tap	
A6243AA	Armitage Shanks Markwik 21+ Thermostatic Sequential Panel Mounted Lever Action Tap TMV3	
SCBW123	SanCeram Thermostatic Panel Mounted Infrared Sensor Tap TMV3 (battery) with Removable Spout	TB H6
AT04-002	KWC DVS AquariTherm Panel Mounted Sensor Tap	
A6684AA	Armitage Shanks Markwik 21+ Thermostatic Panel Mounted Infrared Sensor Tap TMV3	

Typical room applications

- Theatres
- Scrub-up areas

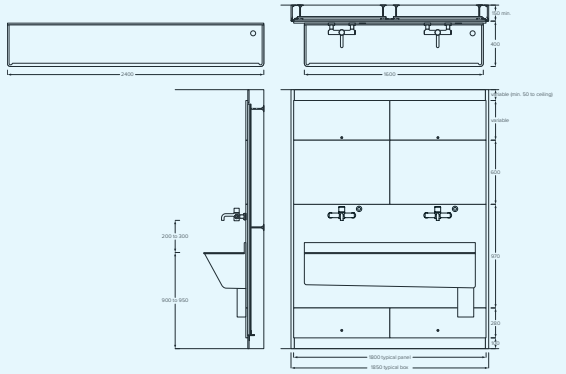

For a larger, detailed technical diagram please see page 61.

Scrub-up trough assemblies SU H2

For use in connection with surgical washing of forearms and hands

Trust System
Frame



CODE	PRODUCT DESCRIPTION	HBN REF
SSSUH2L or SSSUH2R	SanCeram 1600mm Surgeon's Scrub Up Trough L/H or R/H Waste	SU H2
G22030L or G22030R	KWC DVS 1600mm Double Scrub Up Trough L/H or R/H Outlet	
S2873MY or S2874MY	Armitage Shanks Firth 1600mm Double Scrub up Trough L/H or R/H Outlet	

CODE	BRASSWARE OPTIONS	HBN REF
SCBW122	SanCeram Thermostatic Sequential Panel Mounted Lever Action Tap TMV3 with Removable Spout	TB H2a
MT04-001	KWC DVS Manual AquariTherm Panel Mounted Lever Action Tap	
A6737AA	Armitage Shanks Markwik 21+ Panel Mounted Sensor Tap	
A6243AA	Armitage Shanks Markwik 21+ Thermostatic Sequential Panel Mounted Lever Action Tap TMV3	
SCBW123	SanCeram Thermostatic Panel Mounted Infrared Sensor Tap TMV3 (battery) with Removable Spout	TB H6
AT04-002	KWC DVS AquariTherm Panel Mounted Sensor Tap	
A6684AA	Armitage Shanks Markwik 21+ Thermostatic Panel Mounted Infrared Sensor Tap TMV3	

NOTE: SU H2 is available as a corner box only due to sheet size limitations as mentioned on page 8.

Typical room applications

- Theatres
- Scrub-up areas

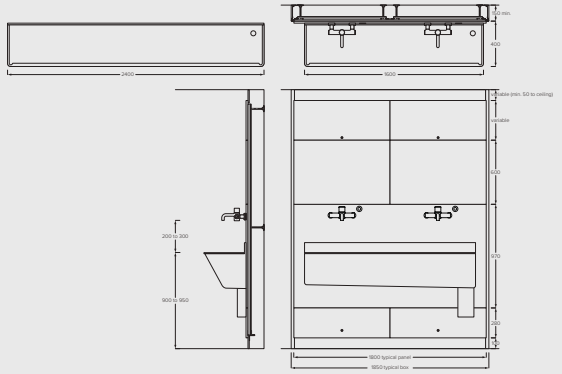

For a larger, detailed technical diagram please see page 61.

Sink and sink top assemblies ST A, ST B, ST C

For use in connection with clinical procedures

Traditional
Frame



CODE	PRODUCT DESCRIPTION	HBN REF
SSSTA0THL or SSSTA0THR	SanCeram Sink and Drainer Top L/H or R/H Drainer No Tap Holes	ST A
G22006L or G22006R	KWC DVS 1200mm Single Bowl Single Drainer L/H or R/H Drainer No Tap Holes	
S5987MY or S5985MY	Armitage Shanks Doon Single Bowl Single Drainer L/H or R/H	
SSSTB	SanCeram Sink and Double Drainer No Tap Holes	ST B
G22008D	KWC DVS 1800mm Single Bowl Double Drainer No Tap Holes	
S5993MY	Armitage Shanks Doon Single Centre Bowl Double Drainer	
SSSTCL or SSSTCR	SanCeram Double Sink and Drainer Top L/H or R/H Drainer No Tap Holes	ST C
G22010L or G22010R	KWC DVS 1800mm Double Bowl Single Drainer L/H or R/H Drainer No Tap Holes	
S5995MY	Armitage Shanks Doon Double Bowl Single Drainer R/H	

CODE	BRASSWARE OPTIONS	HBN REF
DLV095	Deva Panel Mounted Lever Action Bib Taps with 6" Levers (pr) and ZQ5567XX extensions (single)	TB H1
S8270AA	Armitage Shanks Markwik 1/2" lever bib taps (pair) with Nimbus 21 Concealed Bib tap wall mounts (pair) and B1682AA Nimbus 21 1/2" x 75mm bib tap extensions (pair)	

Typical room applications

- Theatres
- Scrub-up areas

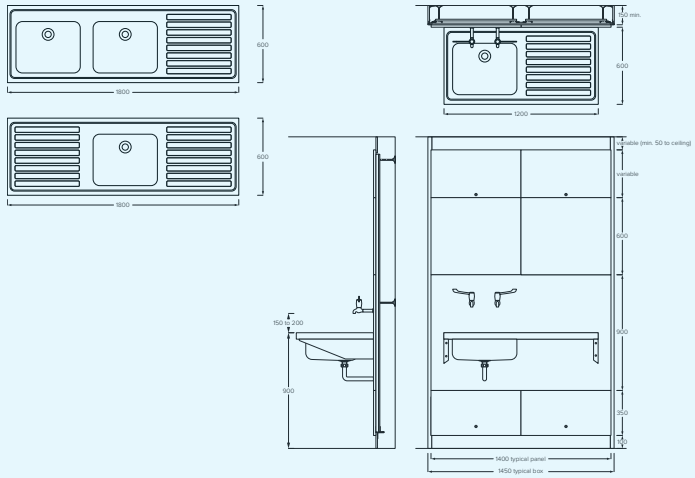

For a larger, detailed technical diagram please see page 62.

Sink and sink top assemblies ST A

For use in connection with clinical procedures

Trust System
Frame



CODE	PRODUCT DESCRIPTION	HBN REF
SSSTA0THL or SSSTA0THR	SanCeram Sink and Drainer Top L/H or R/H Drainer No Tap Holes	ST A
G22006L or G22006R	KWC DVS 1200mm Single Bowl Single Drainer L/H or R/H Drainer No Tap Holes	
S5987MY or S5985MY	Armitage Shanks Doon Single Bowl Single Drainer L/H or R/H	

CODE	BRASSWARE OPTIONS	HBN REF
DLV095	Deva Panel Mounted Lever Action Bib Taps with 6" Levers (pr) and ZQ5567XX extensions (single)	TB H1
S8270AA	Armitage Shanks Markwik 1/2" lever bib taps (pair) with Nimbus 21 Concealed Bib tap wall mounts (pair) and B1682AA Nimbus 21 1/2" x 75mm bib tap extensions (pair)	

Typical room applications

- Theatres
- Scrub-up areas

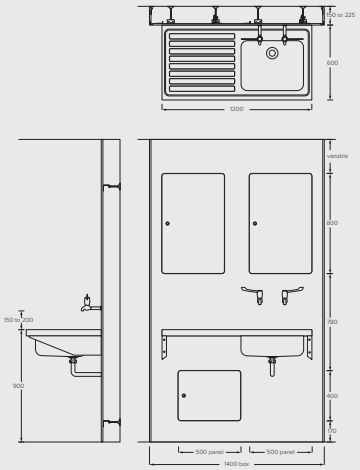

For a larger, detailed technical diagram please see page 62.

Sink and sink top assemblies SK 1, SK 2

For use in connection with domestic service procedures

Traditional
Frame



CODE	PRODUCT DESCRIPTION	HBN REF
SSSK12TH	SanCeram Single Bowl Sink with 2 Tap Holes	SK 1
G22002NT	KWC DVS Single Bowl Hospital Sink 2 Tap Holes	
S6000MY	Armitage Shanks Doon Single Bowl Sink	
SSSK22TH	SanCeram Double Bowl Sink with 2 Tap Holes	SK 2
G22004N	KWC DVS Double Bowl Hospital Sink 2 Tap Holes	

CODE	BRASSWARE OPTIONS	HBN REF
S8265AA	Armitage Shanks High Neck Basin Mounted Extended Lever Action Pillar Taps	TP3

Typical room applications

- Cleaners' rooms

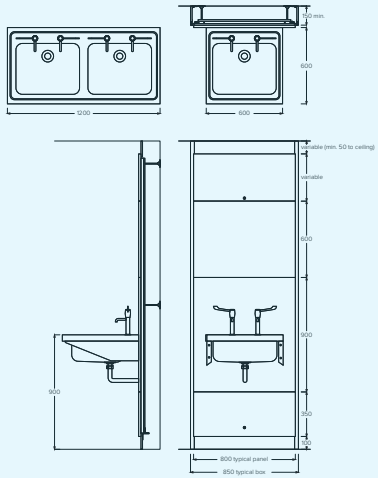

For a larger, detailed technical diagram please see page 63.

Sink and sink top assemblies SK 1, SK 2

For use in connection with domestic service procedures

Trust System
Frame



CODE	PRODUCT DESCRIPTION	HBN REF
SSSK12TH	SanCeram Single Bowl Sink with 2 Tap Holes	SK 1
G22002NT	KWC DVS Single Bowl Hospital Sink 2 Tap Holes	
S6000MY	Armitage Shanks Doon Single Bowl Sink	
SSSK22TH	SanCeram Double Bowl Sink with 2 Tap Holes	SK 2
G22004N	KWC DVS Double Bowl Hospital Sink 2 Tap Holes	

CODE	BRASSWARE OPTIONS	HBN REF
S8265AA	Armitage Shanks High Neck Basin Mounted Extended Lever Action Pillar Taps	TP3

Typical room applications

- Cleaners' rooms

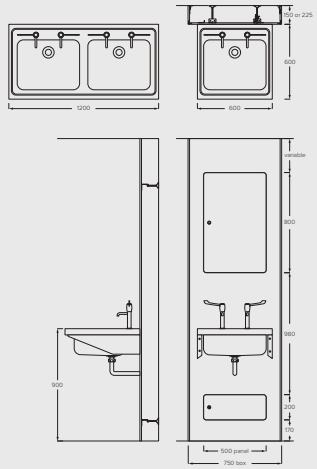

For a larger, detailed technical diagram please see page 63.

Basin assembly LB H M

For use in connection with clinical procedures

Traditional
Frame



CODE	PRODUCT DESCRIPTION	REF
CHWB107	SanCeram Chartham Clinical Basin 500 No Tap Hole, Overflow or Chain Hole Back Outlet	LB H M
S215401 or S0444HY	Armitage Shanks Contour 21 Clinical Basin 500 or 600 No Tap Hole, Overflow or Chain Hole Back Outlet	LB H M

CODE	BRASSWARE OPTIONS	REF
SCBW122	SanCeram Thermostatic Sequential Panel Mounted Lever Action Tap TMV3 with Removable Spout	TB H2a
MT04-001	KWC DVS Manual AquariTherm Panel Mounted Lever Action Tap	TB H2a
A6243AA	Armitage Shanks Markwik 21+ Thermostatic Sequential Panel Mounted Lever Action Tap TMV3	TB H2a
SCBW123	SanCeram Thermostatic Panel Mounted Infrared Sensor Tap TMV3 (battery) with Removable Spout	TB H6
AT04-002	KWC DVS AquariTherm Panel Mounted Sensor Tap	TB H6
AT02-022	KWC DVS 250mm Panel Mounted Tap Spout and Sensor with Copper Tails	TB H6
A6684AA	Armitage Shanks Markwik 21+ Thermostatic Panel Mounted Infrared Sensor Tap TMV3	TB H6

Typical room applications

- 4/6 bed wards
- Single bed wards
- Dirty utility
- Clean utility
- Treatment rooms
- Consulting rooms

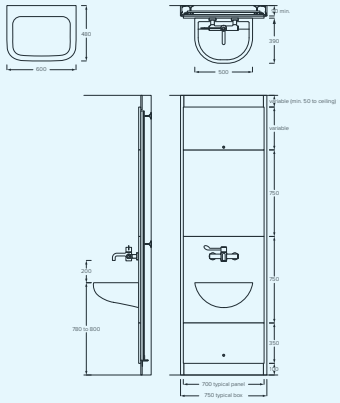

For a larger, detailed technical diagram please see page 64.

Basin assembly LB H M

For use in connection with clinical procedures

Trust System
Frame



CODE	PRODUCT DESCRIPTION	REF
CHWB107	SanCeram Chartham Clinical Basin 500 No Tap Hole, Overflow or Chain Hole Back Outlet	LB H M
S215401 or S0444HY	Armitage Shanks Contour 21 Clinical Basin 500 or 600 No Tap Hole, Overflow or Chain Hole Back Outlet	LB H M

CODE	BRASSWARE OPTIONS	REF
SCBW122	SanCeram Thermostatic Sequential Panel Mounted Lever Action Tap TMV3 with Removable Spout	TB H2a
MT04-001	KWC DVS Manual AquariTherm Panel Mounted Lever Action Tap	TB H2a
A6243AA	Armitage Shanks Markwik 21+ Thermostatic Sequential Panel Mounted Lever Action Tap TMV3	TB H2a
SCBW123	SanCeram Thermostatic Panel Mounted Infrared Sensor Tap TMV3 (battery) with Removable Spout	TB H6
AT04-002	KWC DVS AquariTherm Panel Mounted Sensor Tap	TB H6
AT02-022	KWC DVS 250mm Panel Mounted Tap Spout and Sensor with Copper Tails	TB H6
A6684AA	Armitage Shanks Markwik 21+ Thermostatic Panel Mounted Infrared Sensor Tap TMV3	TB H6

Typical room applications

- 4/6 bed wards
- Single bed wards
- Dirty utility
- Clean utility
- Treatment rooms
- Consulting rooms

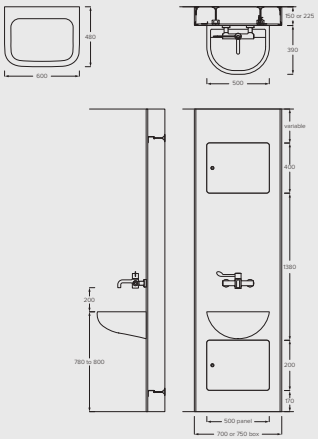

For a larger, detailed technical diagram please see page 64.

Basin assembly LB G M, LB G L

For use in connection with personal washing

Traditional
Frame



CODE	PRODUCT DESCRIPTION	REF
CHWB105	SanCeram Chartham Medical Wash Basin 500 RH Tap Hole, No Overflow or Chain Hole	LB G M
S225401	Armitage Shanks Portman 21 Basin 500 LH Tap Hole, No Overflow or Chain Hole	LB G M or LB G L
S230801 or S229801	Armitage Shanks Portman 21 Basin 500 or 600 RH Tap Hole, No Overflow or Chain Hole	
S225301	Armitage Shanks Portman 21 Basin 500 2 Tap Hole, No Overflow or Chain Hole	

CODE	BRASSWARE OPTIONS	REF
DLT101	Deva Basin Mounted Lever Action Pillar Taps (pr)	TP5
B1678AA	Armitage Shanks Alterna 21 1/2" Basin Mounted Lever Action Pillar Taps	TP5
SCBW120	SanCeram Thermostatic Sequential Basin Mounted Lever Action Mixer Tap TMV3 and SCBW115 Conversion Kit for Copper Tails	TP6
AT03-022	KWC DVS Aquarius DM A45 Basin Mounted Sensor Tap with Copper Tails	TP6
A6696AA	Armitage Shanks Markwik 21+ Thermostatic Sequential Basin Mounted Lever Action Mixer Tap	TP6

Typical room applications

- Ensuites
- Bathrooms

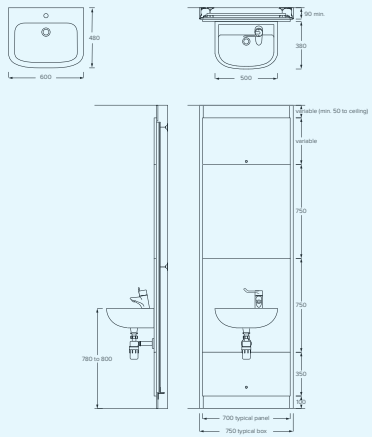

For a larger, detailed technical diagram please see page 65.

Basin assembly LB G M, LB G L

For use in connection with personal washing

Trust System
Frame



CODE	PRODUCT DESCRIPTION	REF
CHWB105	SanCeram Chartham Medical Wash Basin 500 RH Tap Hole, No Overflow or Chain Hole	LB G M
S225401	Armitage Shanks Portman 21 Basin 500 LH Tap Hole, No Overflow or Chain Hole	LB G M or LB G L
S230801 or S229801	Armitage Shanks Portman 21 Basin 500 or 600 RH Tap Hole, No Overflow or Chain Hole	
S225301	Armitage Shanks Portman 21 Basin 500 2 Tap Hole, No Overflow or Chain Hole	

CODE	BRASSWARE OPTIONS	REF
DLT101	Deva Basin Mounted Lever Action Pillar Taps (pr)	TP5
B1678AA	Armitage Shanks Alterna 21 1/2" Basin Mounted Lever Action Pillar Taps	TP5
SCBW120	SanCeram Thermostatic Sequential Basin Mounted Lever Action Mixer Tap TMV3 and SCBW115 Conversion Kit for Copper Tails	TP6
AT03-022	KWC DVS Aquarius DM A45 Basin Mounted Sensor Tap with Copper Tails	TP6
A6696AA	Armitage Shanks Markwik 21+ Thermostatic Sequential Basin Mounted Lever Action Mixer Tap	TP6

Typical room applications

- Ensuites
- Bathrooms

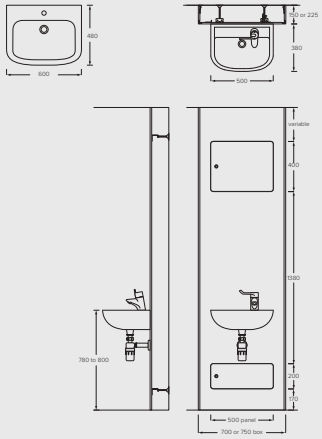

For a larger, detailed technical diagram please see page 65.

Basin assembly LB G S

For hand rinsing only

Traditional
Frame



CODE	PRODUCT DESCRIPTION	REF
CHWB101 or CHWB102	SanCeram Chartham Medical Handrinse Basin 380 LH or RH Tap Hole, No Overflow or Chain Hole	LB G S
S215901 or S231401	Portman 21 Medical Handrise Basin 400 LH or RH Tap Hole, No Overflow or Chain Hole	LB G S

CODE	BRASSWARE OPTIONS	REF
SCBW120	SanCeram Thermostatic Sequential Basin Mounted Lever Action Mixer Tap TMV3 and SCBW115 Conversion Kit for Copper Tails	TP6
AT03-022	KWC DVS Aquarius DM A45 Short Basin Mounted Sensor Tap with Copper Tails	TP6
A6696AA	Armitage Shanks Markwik 21+ Thermostatic Sequential Basin Mounted Lever Action Mixer Tap	TP6

Typical room applications

- Ensuites
- Bathrooms

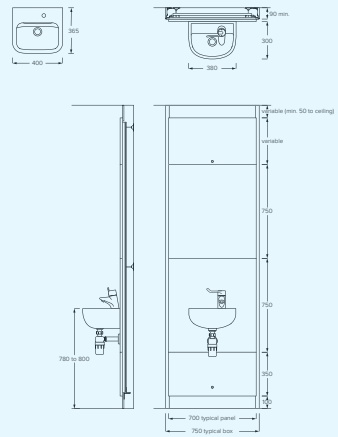

For a larger, detailed technical diagram please see page 66.

Basin assembly LB G S

For hand rinsing only

Trust System
Frame



CODE	PRODUCT DESCRIPTION	REF
CHWB101 or CHWB102	SanCeram Chartham Medical Handrinse Basin 380 LH or RH Tap Hole, No Overflow or Chain Hole	LB G S
S215901 or S231401	Portman 21 Medical Handrise Basin 400 LH or RH Tap Hole, No Overflow or Chain Hole	LB G S

CODE	BRASSWARE OPTIONS	REF
SCBW120	SanCeram Thermostatic Sequential Basin Mounted Lever Action Mixer Tap TMV3 and SCBW115 Conversion Kit for Copper Tails	TP6
AT03-022	KWC DVS Aquarius DM A45 Short Basin Mounted Sensor Tap with Copper Tails	TP6
A6696AA	Armitage Shanks Markwik 21+ Thermostatic Sequential Basin Mounted Lever Action Mixer Tap	TP6

Typical room applications

- Ensuites
- Bathrooms

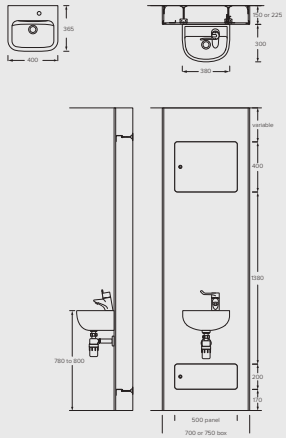

For a larger, detailed technical diagram please see page 66.

WC WC H

For fully ambulant and ambulant disabled users

Traditional
Frame



CODE	PRODUCT DESCRIPTION	REF
CHWC104	SanCeram Chartham Rimless 480 BTW WC Pan Raised Height	WC H

CODE	SEAT OPTIONS
CHWC112	Chartham Seat White
CHWC113	Chartham Seat Blue
CHWC111	Chartham Soft Close Seat and Cover White

CODE	PRODUCT DESCRIPTION	REF
S0440HY	Armitage Shanks Contour 21 BTW Pan Raised Height	WC H

CODE	SEAT OPTIONS
S406601	Ring Seat White
S406636	Ring Seat Blue
S4066LJ	Ring Seat Grey

CODE	SEAT OPTIONS
S4066RN	Ring Seat Charcoal
S4066GQ	Ring Seat Red

CODE	FLUSH/CISTERN OPTIONS
CIST102	SanCeram 6L Cistern with Long Lever
CIST108	SanCeram 6L Cistern with Single Sensor Flush with optional CIST110 battery to mains converter
CIST109	SanCeram 6L Cistern with Dual Sensor Flush with optional CIST110 battery to mains converter
S360467	Armitage Shanks Sensorflow 21 4/4.5L Cistern Sensor Flush
S361767	Armitage Shanks Conceala 2 4.5/6L Cistern Long Lever Flush

Typical room applications

- Staff areas
- Public areas
- Patient WCs
- Ensuites

For a larger, detailed technical diagram please see page 67.
For more flush options please refer to page 54.

WC WC H

For fully ambulant and ambulant disabled users

Trust System
Frame



CODE	PRODUCT DESCRIPTION	REF
CHWC104	SanCeram Chartham Rimless 480 BTW WC Pan Raised Height	WC H

CODE	SEAT OPTIONS
CHWC112	Chartham Seat White
CHWC113	Chartham Seat Blue
CHWC111	Chartham Soft Close Seat and Cover White

CODE	PRODUCT DESCRIPTION	REF
S0440HY	Armitage Shanks Contour 21 BTW Pan Raised Height	WC H

CODE	SEAT OPTIONS
S406601	Ring Seat White
S406636	Ring Seat Blue
S4066LJ	Ring Seat Grey

CODE	SEAT OPTIONS
S4066RN	Ring Seat Charcoal
S4066GQ	Ring Seat Red

CODE	FLUSH/CISTERN OPTIONS
CIST102	SanCeram 6L Cistern with Long Lever
CIST108	SanCeram 6L Cistern with Single Sensor Flush with optional CIST110 battery to mains converter
CIST109	SanCeram 6L Cistern with Dual Sensor Flush with optional CIST110 battery to mains converter
S360467	Armitage Shanks Sensorflow 21 4/4.5L Cistern Sensor Flush
S361767	Armitage Shanks Conceala 2 4.5/6L Cistern Long Lever Flush

Typical room applications

- Staff areas
- Public areas
- Patient WCs
- Ensuites

For a larger, detailed technical diagram please see page 67.
For more flush options please refer to page 54.

WC WC HD

For assisted ambulant disabled/wheelchair users

Traditional
Frame



CODE	PRODUCT DESCRIPTION	REF
CHWC105	SanCeram Chartham Rimless 700 BTW WC Pan Raised Height	WC HD

CODE	SEAT OPTIONS
CHWC112	Chartham Seat White
CHWC113	Chartham Seat Blue
CHWC111	Chartham Soft Close Seat and Cover White

CODE	PRODUCT DESCRIPTION	REF
S0437HY	Armitage Shanks Contour 21 700 BTW Pan Raised Height	WC HD

CODE	SEAT OPTIONS
S406601	Ring Seat White
S406636	Ring Seat Blue
S4066LJ	Ring Seat Grey

CODE	SEAT OPTIONS
S4066RN	Ring Seat Charcoal
S4066GQ	Ring Seat Red

CODE	GRAB RAILS AND BACK RESTS
S6454(AC/36/LJ/RN/GQ)	Contour 21 Grab Rail - 600mm (x2)
S6452(AC/36/LJ/RN/GQ)	Contour 21 Grab Rail - 450mm (x1)
S6360(AC/36/LJ/RN/GQ)	Hinged Grab Rail
S6481(AC/36/LJ/RN/GQ)	Back Rest Support Rail
S6884(AC/36/LJ/RN/GQ)	Back Rest Cushion

Typical room applications

- Assisted WCs

For a larger, detailed technical diagram please see page 68.
For more flush options please refer to page 50.

WC WC HD

For assisted ambulant disabled/wheelchair users

Trust System
Frame



CODE	PRODUCT DESCRIPTION	REF
CHWC105	SanCeram Chartham Rimless 700 BTW WC Pan Raised Height	WC HD

CODE	SEAT OPTIONS
CHWC112	Chartham Seat White
CHWC113	Chartham Seat Blue
CHWC111	Chartham Soft Close Seat and Cover White

CODE	PRODUCT DESCRIPTION	REF
S0437HY	Armitage Shanks Contour 21 700 BTW Pan Raised Height	WC HD

CODE	SEAT OPTIONS
S406601	Ring Seat White
S406636	Ring Seat Blue
S4066LJ	Ring Seat Grey

CODE	SEAT OPTIONS
S4066RN	Ring Seat Charcoal
S4066GQ	Ring Seat Red

CODE	GRAB RAILS AND BACK RESTS
S6454(AC/36/LJ/RN/GQ)	Contour 21 Grab Rail - 600mm (x2)
S6452(AC/36/LJ/RN/GQ)	Contour 21 Grab Rail - 450mm (x1)
S6360(AC/36/LJ/RN/GQ)	Hinged Grab Rail
S6481(AC/36/LJ/RN/GQ)	Back Rest Support Rail
S6884(AC/36/LJ/RN/GQ)	Back Rest Cushion

Typical room applications

- Assisted WCs

For a larger, detailed technical diagram please see page 68.
For more flush options please refer to page 50.

Typical ensuite and assisted WC areas

Traditional
Frame



CODE	PRODUCT DESCRIPTION
S6454(AC/36/LJ/RN/GQ)	Contour 21 Grab rail - 600mm (x3)
S6452(AC/36/LJ/RN/GQ	Contour 21 Grab Rail - 450mm (x1)
S6360(AC/36/LJ/RN/GQ)	Hinged Grab Rail
S6481(AC/36/LJ/RN/GQ)	Back Rest Support Rail
S6884(AC/36/LJ/RN/GQ)	Back Rest Cushion

WC HD and LB G S combined for a typical ensuite and assisted WC layout. Please refer to pages 53 and 54 for sanitaryware options.

Typical room applications

- Assisted WCs

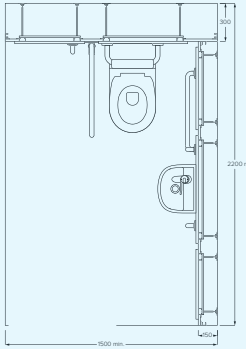

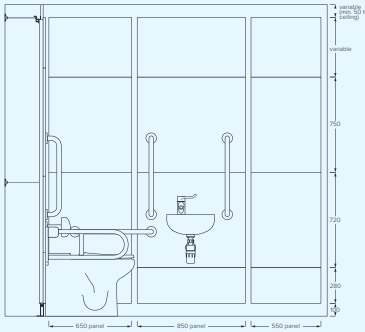

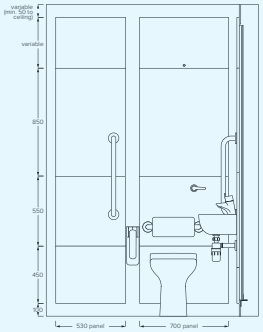

For a larger, detailed technical diagram please see page 69.

Typical ensuite and assisted WC areas

Trust System
Frame



CODE	PRODUCT DESCRIPTION
S6454(AC/36/LJ/RN/GQ)	Contour 21 Grab rail - 600mm (x3)
S6452(AC/36/LJ/RN/GQ	Contour 21 Grab Rail - 450mm (x1)
S6360(AC/36/LJ/RN/GQ)	Hinged Grab Rail
S6481(AC/36/LJ/RN/GQ)	Back Rest Support Rail
S6884(AC/36/LJ/RN/GQ)	Back Rest Cushion

WC HD and LB G S combined for a typical ensuite and assisted WC layout. Please refer to pages 53 and 54 for sanitaryware options.

Typical room applications

- Assisted WCs

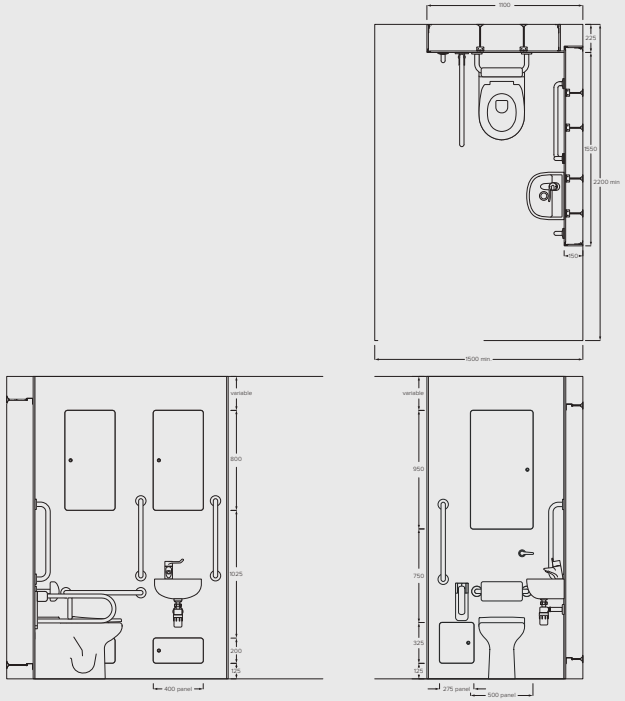

For a larger, detailed technical diagram please see page 69.

Typical shower assembly TM1

Traditional
Frame



CODE	PRODUCT DESCRIPTION	
B9306AA	Armitage Shanks Armaglide Single Function Handspray, 900mm Rail and 1750mm Spiral Hose	
AVSH001	Deva Fixed Panel Mounted Shower Head	

CODE	BRASSWARE OPTIONS	REF
SHWR112	SanCeram Thermostatic Sequential Lever Operated Concealed Shower Valve TMV3	TM 1
A4129AA	Armitage Shanks Contour 21 Thermostatic Sequential Single Lever Operated Concealed Shower Valve	TM 1
SH07-010	KWC DVS Wave On/Off Sensor with SH00-011 Temperature Blending Valve and AC17-047 TMV	TM 1

CODE	PRODUCT DESCRIPTION	REF
SHWR118	SanCeram Anti-Ligature Fixed Shower Head KWC DVS SH07-010 DVS Wave On/Off Sensor with SH00-011 DVS Temperature Blending Valve and AC17-047 TMV	TM1

Typical room applications

- Ensuites
- Bathrooms

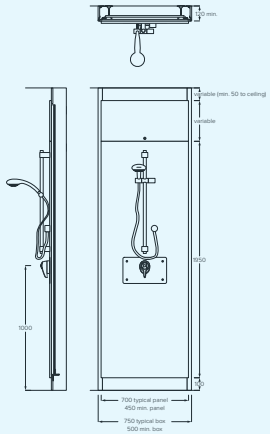

For a larger, detailed technical diagram please see page 70.

Typical shower assembly TM1

Trust System
Frame



CODE	PRODUCT DESCRIPTION	
B9306AA	Armitage Shanks Armaglide Single Function Handspray, 900mm Rail and 1750mm Spiral Hose	
AVSH001	Deva Fixed Panel Mounted Shower Head	

CODE	BRASSWARE OPTIONS	REF
SHWR112	SanCeram Thermostatic Sequential Lever Operated Concealed Shower Valve TMV3	TM 1
A4129AA	Armitage Shanks Contour 21 Thermostatic Sequential Single Lever Operated Concealed Shower Valve	TM 1
SH07-010	KWC DVS Wave On/Off Sensor with SH00-011 Temperature Blending Valve and AC17-047 TMV	TM 1

CODE	PRODUCT DESCRIPTION	REF
SHWR118	SanCeram Anti-Ligature Fixed Shower Head KWC DVS SH07-010 DVS Wave On/Off Sensor with SH00-011 DVS Temperature Blending Valve and AC17-047 TMV	TM1

Typical room applications

- Ensuites
- Bathrooms

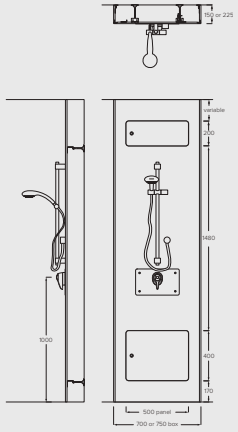

For a larger, detailed technical diagram please see page 70.

Mental Healthcare

A great range of pre-plumbed solutions developed specifically for mental healthcare

Bushboards Ready Plumbed Modules for safe ensuites combine a dedicated range of high security sanitaryware with the reduced ligature IPS units.

The result is a range of ready plumbed solutions that are manufactured to the highest quality that prioritise patient safety.

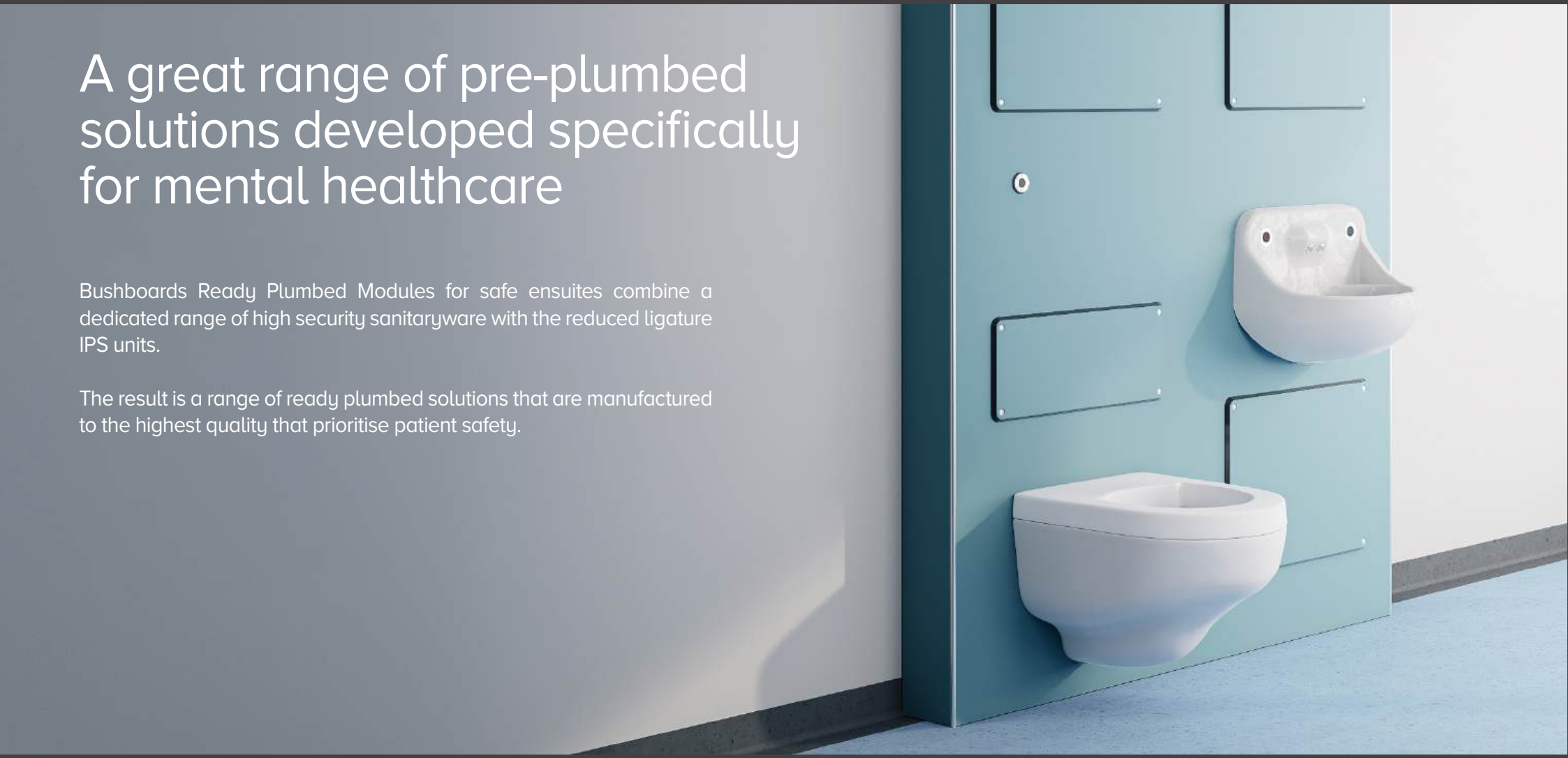

High Risk Mental Health Design

Panels are manufactured from high density Solid Grade Laminate (SGL), a strong, highly impact resistant material that is robust, durable and impervious to water.

High Security Sanitaryware
Our range of high and low security sanitaryware offers the option of floor mounted or panel mounted WCs with sensor flush options that are both vandal proof and anti-ligature. Unlike conventional sanitaryware, the structure of safe ensuite products is virtually indestructible. An attractive alternative to stainless steel, this high impact resistant sanitaryware is manufactured from anti-shatter moulded resin.

Finished with a sanitaryware grade gel-coating which provides high chemical resistance. These WCs and washbasins are of a unique and unrivalled design and are both hygienic and attractive.

Reduced ligature Details
Designed to support safer environments, the Trust Reduced Ligature System incorporates a rebated panel access design with chamfered, sloping panel faces intended to reduce potential ligature opportunities.

The panel is secured within a recessed rebate using high-security fixings, drawing the panel tightly into position and helping to minimise accessible gaps around the perimeter. The chamfered design avoids straight edges and sharp transitions, while the enclosed design eliminates small openings and accessible voids that could present opportunities for misuse.

The combination of robust materials, secure fixing methods, and considered detailing provides a durable solution suitable for demanding environments. The solid construction is designed to withstand the challenges or every day use, including impacts from thrown objects and forceful contact, while maintaining a functional and clean appearance



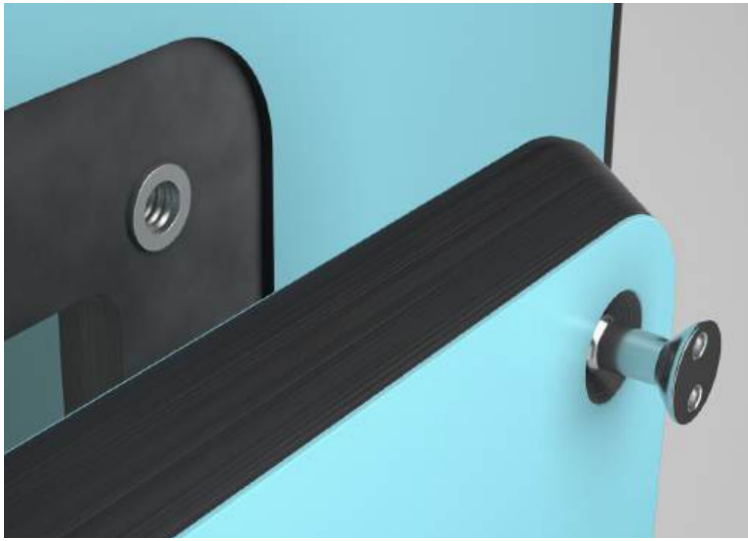



High risk with back to wall WC

Reduced Ligature
Trust System Frame



CODE	PRODUCT DESCRIPTION	
VR01-030	KWC DVS High Security V2 Wash Basin and Backplate Set	
CONTROL KIT	**FITTINGS AND WASTE**	**Thermostatic Mixing Valve TMV3**
AT07-001	VR01-028 KWC DVS High Security Grid Waste	AC17-047
CODE	**PRODUCT DESCRIPTION**	
VR01-010	KWC DVS High Security BTW WC	
CONTROL KIT	**FLUSH/CISTERN OPTIONS**	
AC02-040 with WC02-011	6L Cistern with Sensor Flush	

Typical room applications

- Ensuites



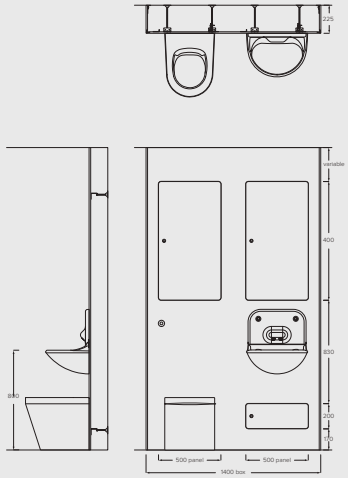

For a larger, detailed technical diagram please see page 71.

High risk with wall hung WC

Reduced Ligature
Trust System Frame



CODE	PRODUCT DESCRIPTION	
VR01-030	KWC DVS High Security V2 Wash Basin and Backplate Set	
CONTROL KIT	**FITTINGS AND WASTE**	**Thermostatic Mixing Valve TMV3**
AT07-001	VR01-028 KWC DVS High Security Grid Waste	AC17-047
CODE	**PRODUCT DESCRIPTION**	
VR01-017	KWC DVS High Security V2 Wall Hung WC	
CONTROL KIT	**FLUSH/CISTERN OPTIONS**	
AC02-040 with WC02-011	6L Cistern with Sensor Flush	

Typical room applications

- Ensuites



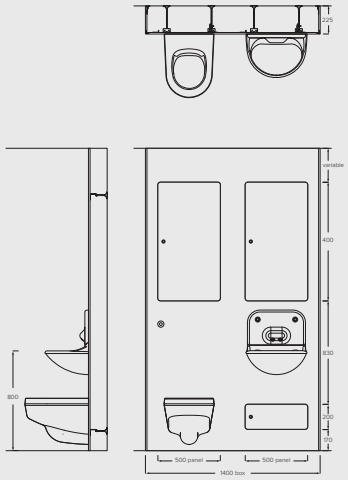

For a larger, detailed technical diagram please see page 71.

Sanitaryware and brassware



A carefully selected range of sanitaryware and brassware, specifically chosen to meet the needs of clinical environments.

Sanitaryware

Basins



SanCeram Chartham Clinical Basin 500

CHWB107

REF: LB H M

No Tap Hole, Overflow or Chain Hole Back Outlet



Armitage Shanks Contour 21 Clinical Basin 500

S215401

REF: LB H M

No Tap Hole, Overflow or Chain Hole Back Outlet



Armitage Shanks Contour 21 Clinical Basin 600

S0444HY

REF: LB H M

No Tap Hole, Overflow or Chain Hole Back Outlet



SanCeram Chartham Clinical Basin 600

CHWB105

REF: LB G M

RH Tap Hole, No Overflow or Chain Hole



Armitage Shanks Portman 21 Basin 500

S225401 - LH Tap Hole
S230801 - RH Tap Hole
S225301 - 2 Tap Hole

REF: LB G M

No Overflow or Chain Hole



Armitage Shanks Portman 21 Basin 600

S229801

REF: LB G M

RH Tap Hole, No Overflow or Chain Hole



SanCeram Chartham Medical Handrise Basin 380

CHWB101 - LH Tap Hole
CHWB102 - RH Tap Hole

REF: LB G S

No Overflow or Chain Hole



Armitage Shanks Portman 21 Medical Handrise Basin 400

S215901 - LH Tap Hole
S231401 - RH Tap Hole

REF: LB G S

No Overflow or Chain Hole

WCs



SanCeram Chartham Rimless 480 BTW WC Pan Raised Height

CHWC104

REF: WC H

Seat Options:
CHWC112 Chartham Seat White

CHWC113 Chartham Seat Blue

CHWC111 Cover and Soft Close Seat White



Armitage Shanks Contour 21 BTW Pan Raised Height

S0440HY

REF: WC H

Seat Options:
S406601 Ring Seat White

S406636 Ring Seat Blue

S4066LJ Ring Seat Grey

S4066RN Ring Seat Charcoal

S4066GQ Ring Seat Red



SanCeram Chartham Rimless 700 BTW WC Pan Raised Height

CHWC105

REF: WC HD

Seat Options:
CHWC112 Chartham Seat White

CHWC113 Chartham Seat Blue

CHWC111 Cover and Soft Close Seat White



Armitage Contour 21 700 BTW Pan Raised Height

S0437HY

REF: WC HD

Seat Options:
S406601 Ring Seat White

S406636 Ring Seat Blue

S4066LJ Ring Seat Grey

S4066RN Ring Seat Charcoal

S4066GQ Ring Seat Red

Sanitaryware

Mental Health



KWC DVS High Security V2 Wash Basin and Backplate Set

VR01-030



KWC DVS High Security BTW WC

VR01-010



KWC DVS High Security V2 Wall Hung WC

VR01-017



SanCeram Anti-Ligature Fixed Shower Head

SHWR118

Flush Options



SanCeram 6L Cistern with Lever

CIST101



SanCeram 6L Cistern with Long Lever

CIST102



SanCeram 6L Pneumatic Single Flush Cistern with Palm Push

CIST105



SanCeram 6/4L Pneumatic Dual Flush Cistern with Dual Flush Plate

CIST107



SanCeram 6L Cistern with Single Sensor Flush

CIST108

With optional CIST110 battery to mains converter



SanCeram 6L Cistern with Dual Sensor Flush

CIST109

With optional CIST110 battery to mains converter

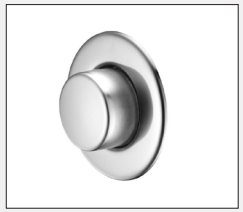

Ideal Standard 6L Pneumatic Single Flush Cistern with Push Button

S4513MY



Ideal Standard 6/4L Pneumatic Dual Flush Cistern with Dual Flush Plate

E4463AA



Armitage Shanks Sensorflow 21 4/4.5L Cistern Sensor Flush

S360467



Armitage Shanks Conceala 2 4.5/6L Cistern Long Lever Flush

S361767

Brassware

Manual Taps



Deva Panel Mounted Lever Action Bib Taps with 6” levers (pr)

DLV095

REF: TB H1



Armitage Shanks Markwik 21+ 1/2” lever action bib taps

S8270AA

REF: TB H1



SanCeram Thermostatic Sequential Panel Mounted Lever Action Tap TMV3 with Removable Spout

SCBW122

REF: TB H2a



KWC DVS Manual AquariTherm Panel Mounted Lever Action Tap

MT04-001

REF: TB H2a



Armitage Shanks Markwik 21+ Thermostatic Sequential Panel Mounted Lever Action Tap TMV3

A6243AA

REF: TB H2a



Armitage Shanks High Neck Basin Mounted Extended Lever Action Pillar Taps

S8265AA

REF: TP3



Deva Deva Basin Mounted Lever Action Pillar Taps (pr)

DLT101

REF: TP5



Armitage Shanks Alterna 21 1/2” Basin Mounted Lever Action Pillar Taps

B1678AA

REF: TP5



SanCeram Thermostatic Sequential Basin Mounted Lever Action Mixer Tap TMV3

SCBW120

REF: TP6



Armitage Shanks Markwik 21+ Thermostatic Sequential Basin Mounted Lever Action Mixer Tap

A6696AA

REF: TP6

Sensor Taps



KWC DVS Aquarius WM Panel Mounted Tap Spouts

AT07-049

REF: TB H1



Armitage Shanks Markwik 21+ Panel Mounted Sensor Tap

A6737AA

REF: TB H2a



SanCeram Thermostatic Panel Mounted Infrared Sensor Tap TMV3 (battery) with Removable Spout

SCBW123

REF: TB H6



KWC DVS AquariTherm Panel Mounted Sensor Taps

AT04-001

REF: TB H6



Armitage Shanks Markwik 21+ Thermostatic Panel Mounted Infrared Sensor Tap TMV3

A6684AA

REF: TB H6



KWC DVS 250mm Panel Mounted Tap Spout and Sensor with Copper Tails

AT02-022

REF: TB H6



KWC DVS Aquarius DM A45 Basin Mounted Sensor Tap with Copper Tails

AT03-022

REF: TP6

Showers



Deva Deva Fixed Panel Mounted Shower Head

AVSH001



SanCeram Anti-Ligature Fixed Shower Head

SHWR118



Armitage Shanks Contour 21 Thermostatic Sequential Single Lever Operated Concealed Shower Valve

A4129AA

REF: TM 1



SanCeram Thermostatic Sequential Lever Operated Concealed Shower Valve TMV3

SHWR112

REF: TM 1



KWC DVS Wave On/Off Sensor with SH00-011 Temperature Blending Valve and AC17-047 TMV

SH07-010

REF: TM 1



Armitage Shanks Armaglide Single Function Handspray, 900mm Rail and 1750mm Spiral Hose

B9306AA

Stainless steel



SanCeram Disposal Unit

SSDUB - without grate
SSDUNG - with grate

REF: DU



KWC DVS 600mm Disposal Hopper

G22041N

REF: DU



SanCeram Disposal Unit and Drainer

SSDUHLHB - LH Sluice
SSDUHRHB - RH Sluice

REF: DU H



KWC DVS 1000mm Disposal Unit

G22016L - LH Drainer
G22016R - RH Drainer

REF: DU H



Armitage Shanks Stirling Disposal Unit with R/H Drainer

S6563MY - RH Drainer

REF: DU H



SanCeram Disposal Unit with Sink and Drainer

SSDUHSLHB - LH Sluice
SSDUHSRHB - RH Sluice

REF: DU HS



KWC DVS Disposal Unit with Sink and Drainer

G22018L - LH Drainer
G22018R - RH Drainer

REF: DU HS



Armitage Shanks Dee Disposal Unit with Sink and Drainer

S3335MY - LH Drainer
S3336MY - RH Drainer

REF: DU HS



SanCeram Plaster Sink with Drainer

SSPSLH - LH Drainer
SSPSRH - RH Drainer

REF: PS H



KWC DVS Plaster Sink with Drainer

G22000L - LH Drainer
G22000R - RH Drainer

REF: PS H



Armitage Shanks Clyde Plaster Sink with Drainer

S1267MY
S1268MY

REF: PS H



SanCeram Janitorial Unit c/w Monobloc Tap

SSJUHBN

REF: JU



KWC DVS Janitorial Unit c/w Monobloc Tap

G20050N

REF: JU



Armitage Shanks Janitorial Unit c/w Monobloc Tap

S0711MY

REF: JU



SanCeram Single Scrub Up Trough

SSSUH1L - LH Waste
SSSUH1R - RH Waste

REF: SU H1



KWC DVS Single Scrub Up Trough

G22029L - LH Outlet
G22029R - RH Outlet

REF: SU H1



Armitage Shanks Firth Single Scrub Up Trough

S2870MY - LH Outlet
S2872MY - RH Outlet

REF: SU H1

Stainless steel



SanCeram Double Scrub Up Trough

SSSUH2L - LH Waste
SSSUH2R - RH Waste

REF: SU H2



SanCeram Sink and Drainer Top

SSSTA0THL - LH Drainer No Tap Holes
SSSTA0THR - RH Drainer No Tap Holes

REF: ST A



SanCeram Double Sink and Single Drainer

SSSTCL - LH Drainer No Tap Holes
SSSTCR - RH Drainer No Tap Holes

REF: ST C



SanCeram Double Bowl Sink

SSSK22TH - 2 Tap Holes

REF: SK 2



KWC DVS Double Scrub Up Trough

G22030L - LH Outlet
G22030R - RH Outlet

REF: SU H2



KWC DVS Single Bowl Single Drainer

G22006L - LH Drainer No Tap Holes
G22006R - RH Drainer No Tap Holes

REF: ST A



KWC DVS Double Bowl Single Drainer

G22010L - LH Drainer No Tap Holes
G22010R - RH Drainer No Tap Holes

REF: ST C



KWC DVS Double Bowl Sink

G22004NT - 2 Tap Holes

REF: SK 2



Armitage Shanks Firth Double Scrub Up Trough

S2873MY - LH Outlet
S2874MY - RH Outlet

REF: SU H2



Armitage Shanks Doon Single Bowl Single Drainer

S5987MY - LH Drainer No Tap Holes
S5985MY - RH Drainer No Tap Holes

REF: ST A



Armitage Shanks Doon Double Bowl Single Drainer

S5995MY - RH Drainer No Tap Holes

REF: ST C



SanCeram Triple Scrub Up Trough

SSSUH3L - LH Waste
SSSUH3R - RH Waste

REF: SU H3



SanCeram Sink and Double Drainer

SSSTB - No Tap Holes

REF: ST B



SanCeram Single Bowl Sink

SSSK12TH - 2 Tap Holes

REF: SK 1



KWC DVS Triple Scrub Up Trough

G22031L - LH Outlet
G22031R - RH Outlet

REF: SU H3



KWC DVS Single Bowl Double Drainer

G22008D - No Tap Holes

REF: ST B



KWC DVS Single Bowl Sink

G22002NT - 2 Tap Holes

REF: SK 1



Armitage Shanks Firth Triple Scrub Up Trough

S2876MY - LH Outlet
S2876MY - RH Outlet

REF: SU H3



Armitage Shanks Doon Single Bowl Sink

S5993MY - No Tap Holes

REF: ST B



Armitage Shanks Doon Single Bowl Sink

S6000MY

REF: SK 1

Technical diagrams

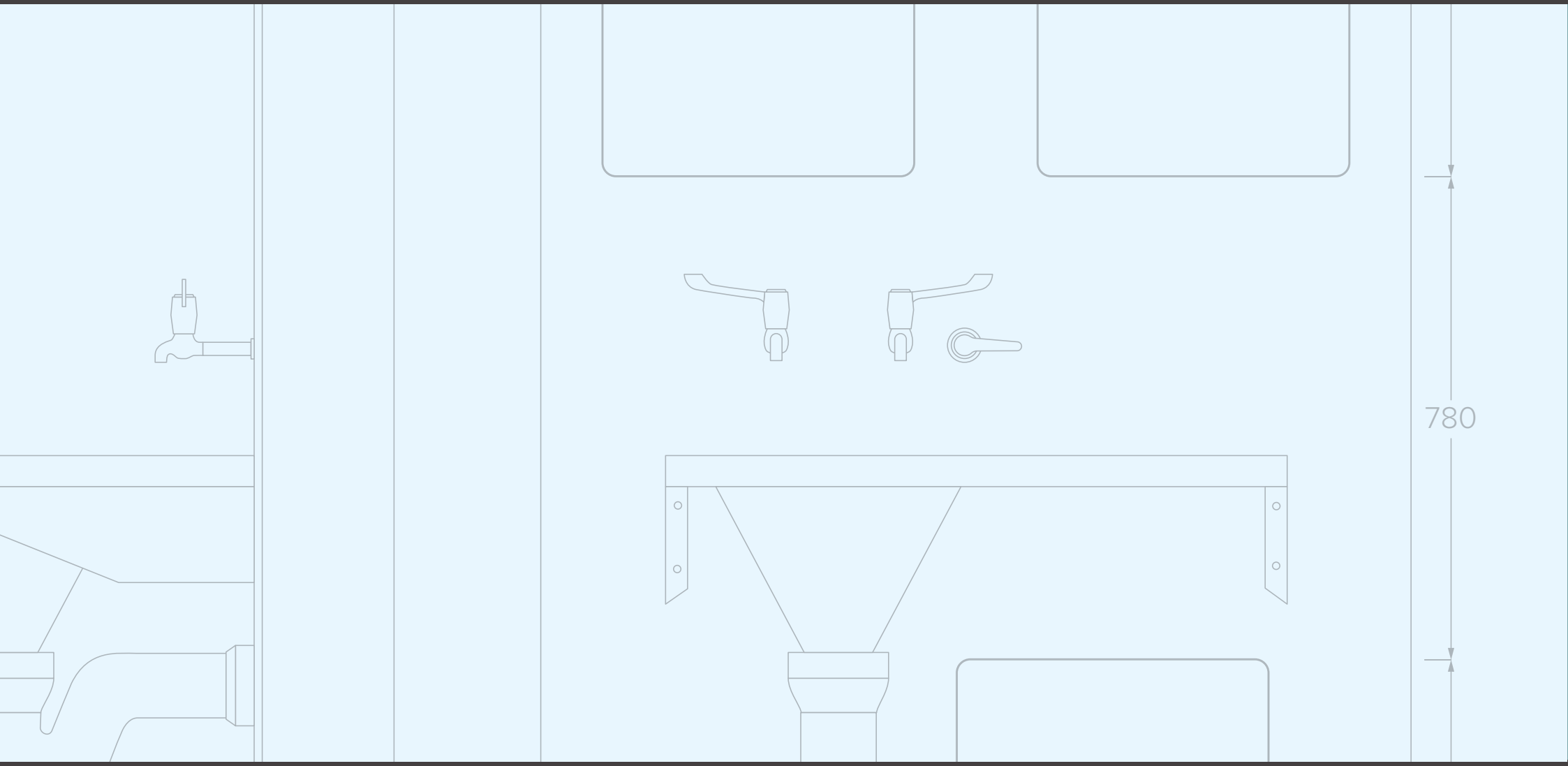

Traditional
Frame

Trust System
Frame

Disposal unit assembly DU HS

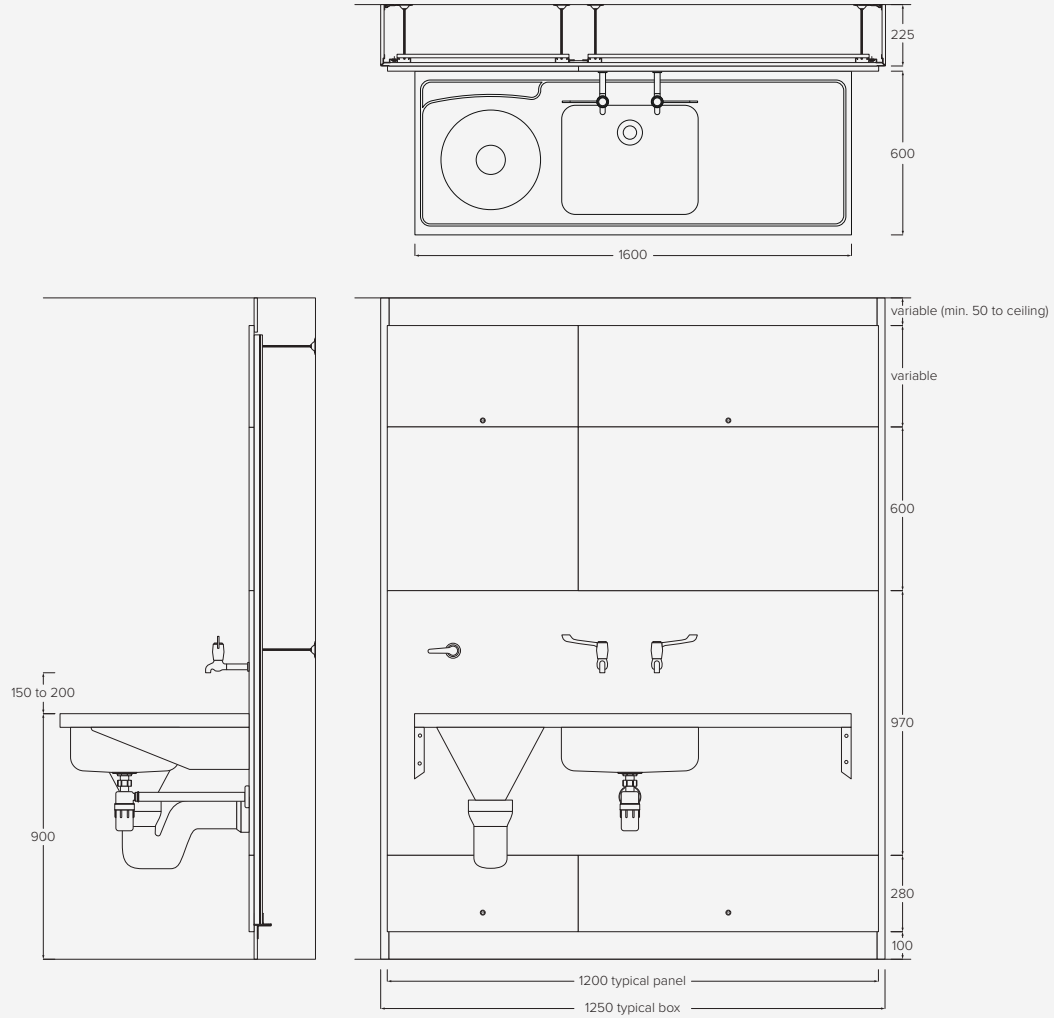

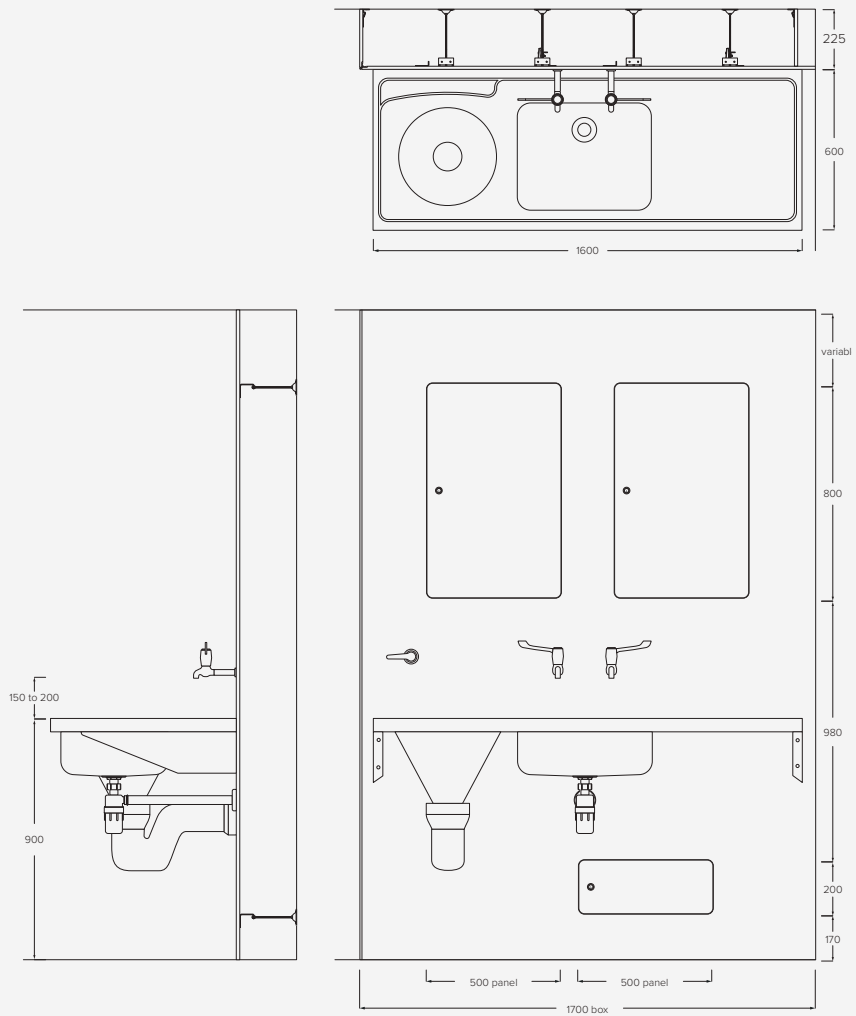

Postformed edges not available on HPL panels wider than 1250mm.

To view product info please see pages 12-13.

Traditional
Frame

Trust System
Frame

Disposal unit assembly DU H

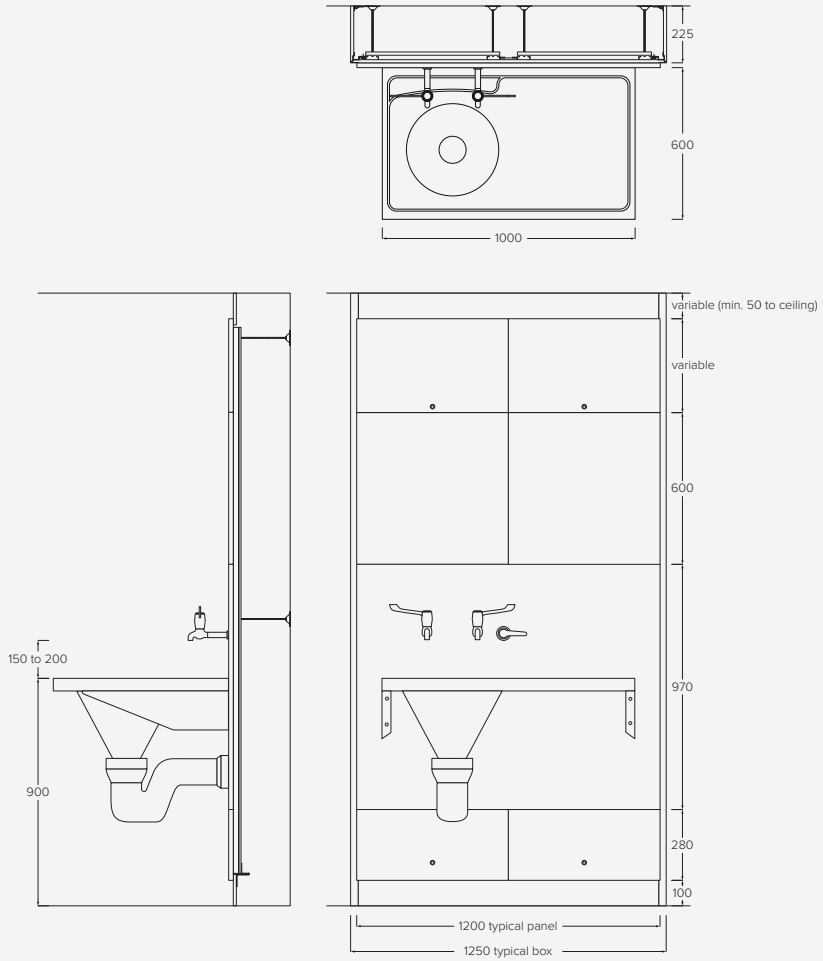

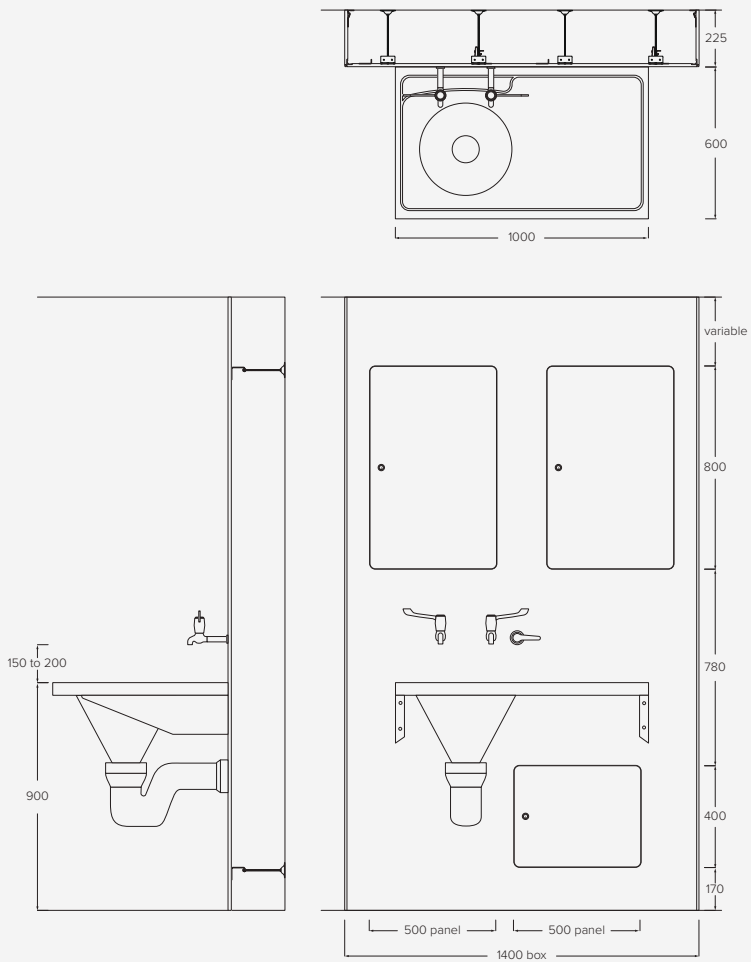

To view product info please see pages 14-15.

Traditional
Frame

Trust System
Frame

Disposal unit assembly DU

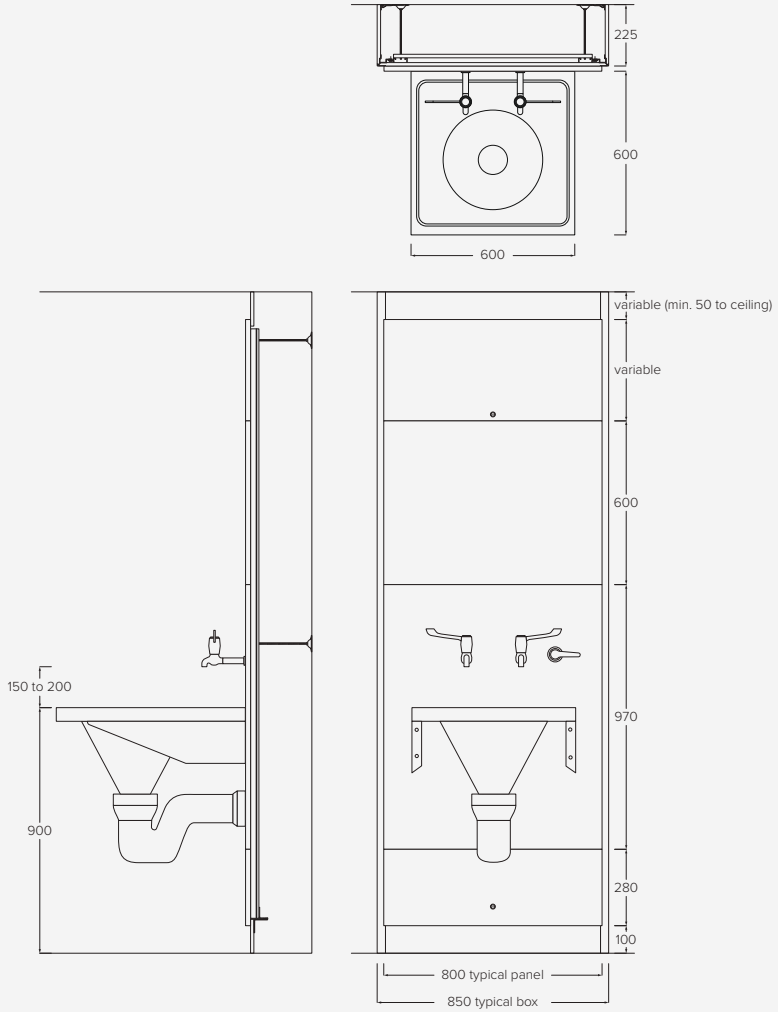

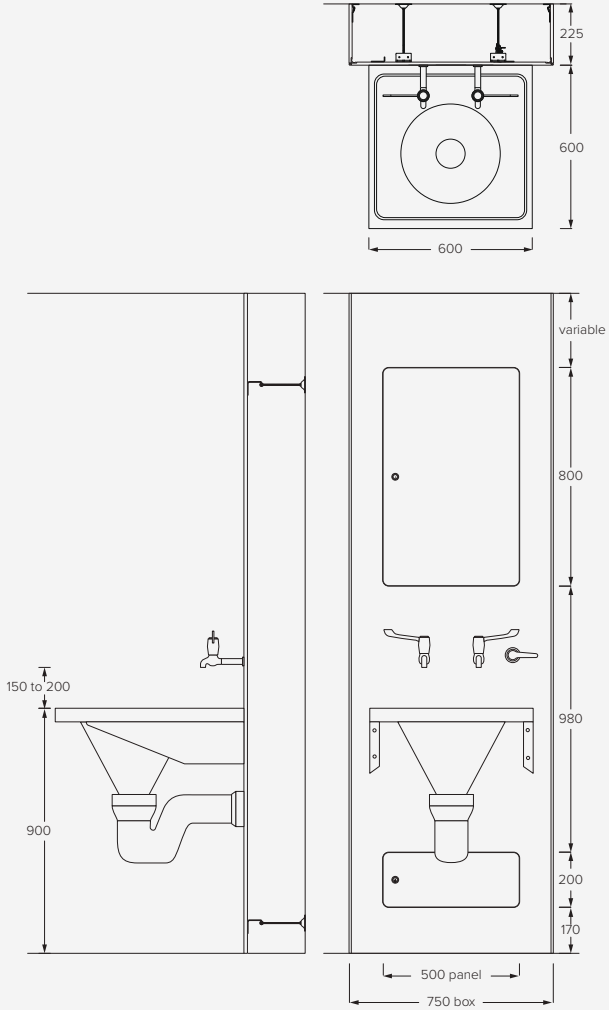

To view product info please see pages 16-17.

Traditional
Frame

Trust System
Frame

Plaster sink assembly PS H

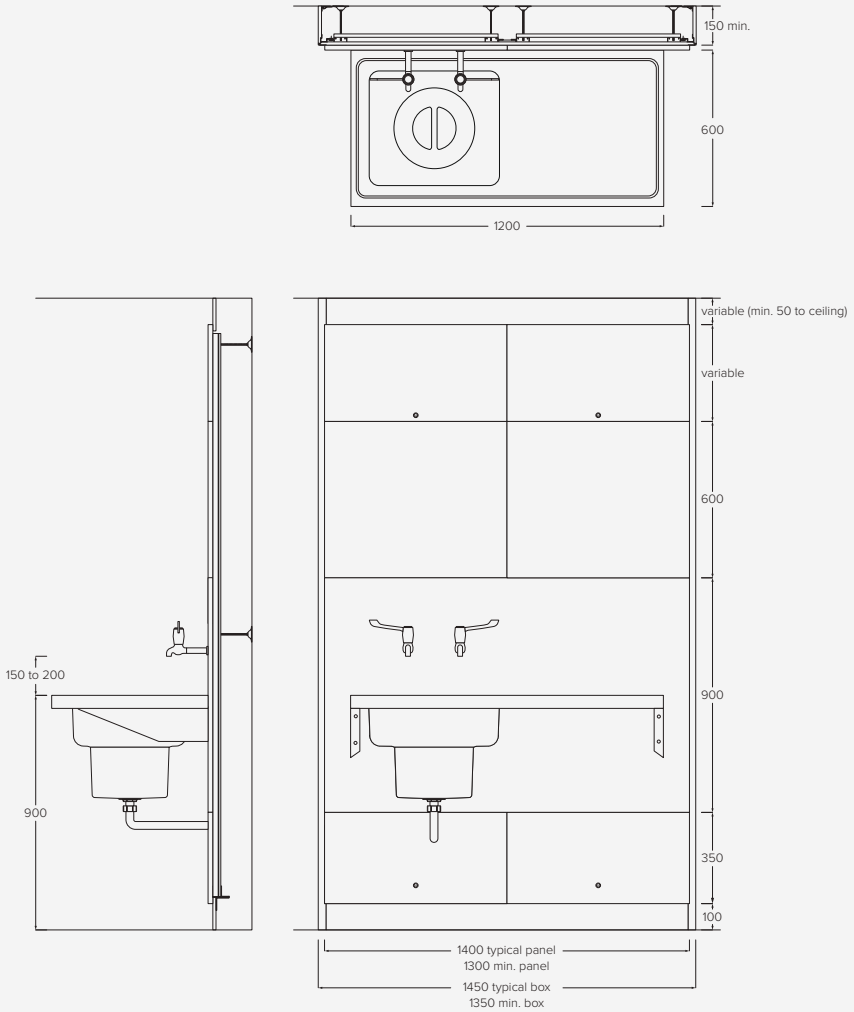

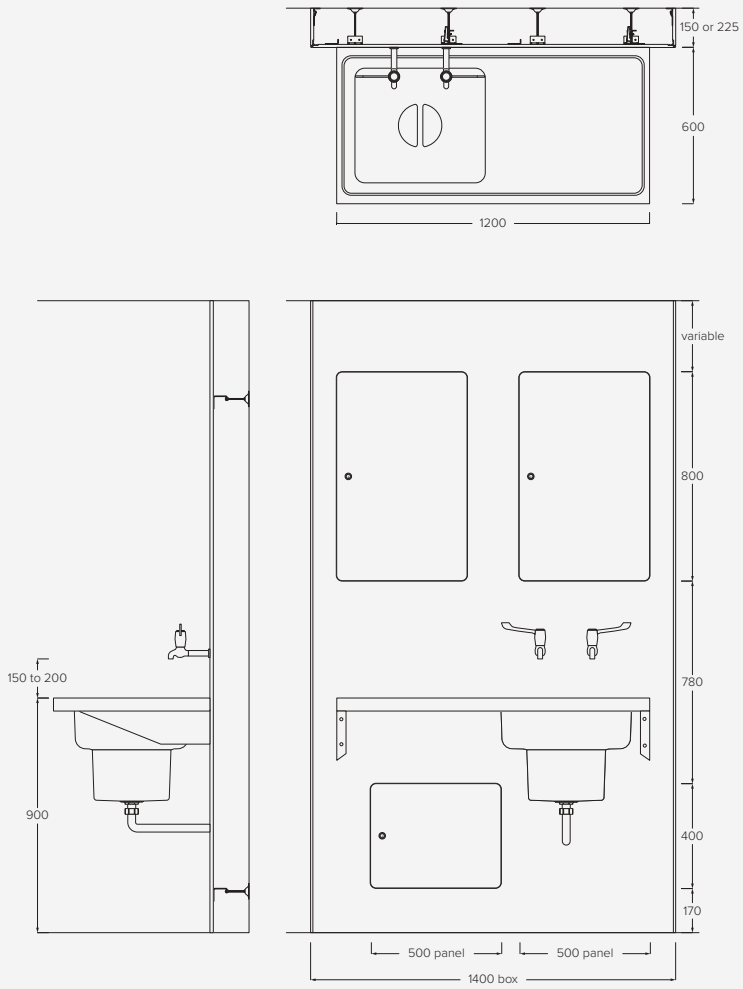

Postformed edges not available on HPL panels wider than 1250mm.

To view product info please see pages 18-19.

Traditional
Frame

Trust System
Frame

Janitorial unit JU

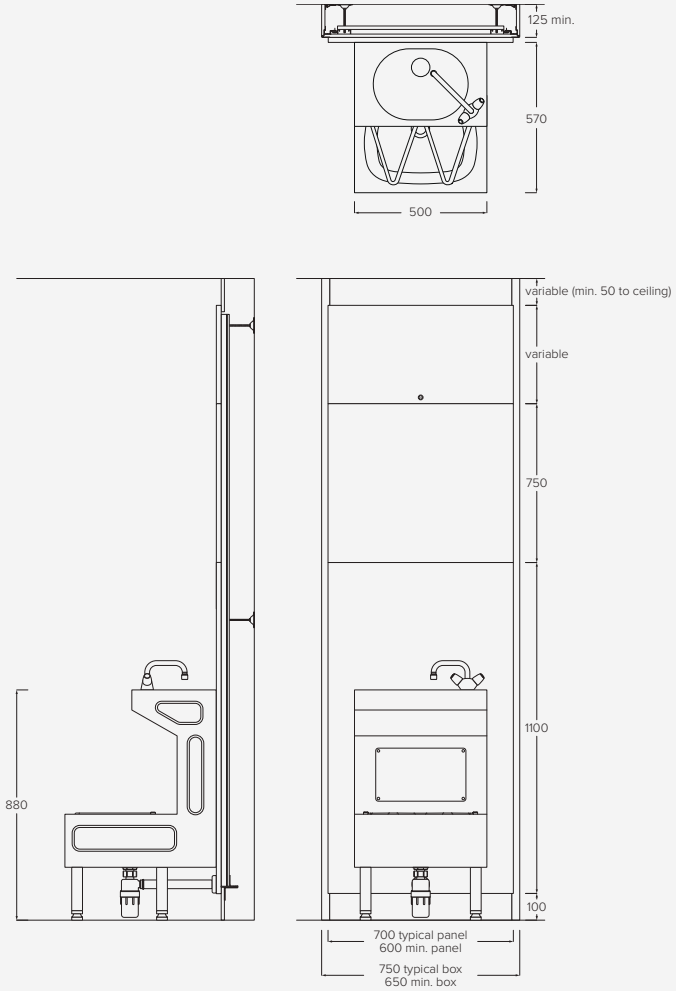

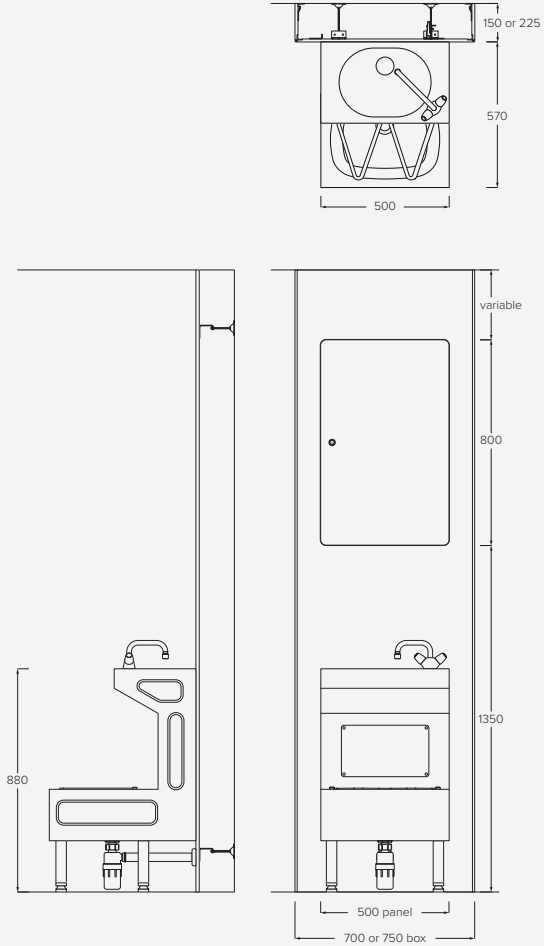

To view product info please see pages 20-21.

Traditional
Frame

Trust System
Frame

Scrub-up trough assemblies SU H1

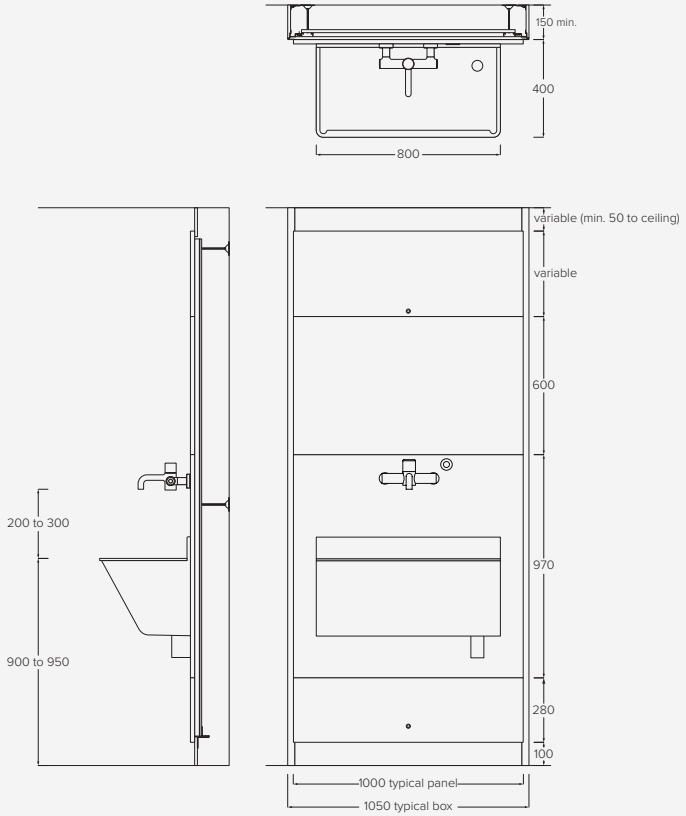

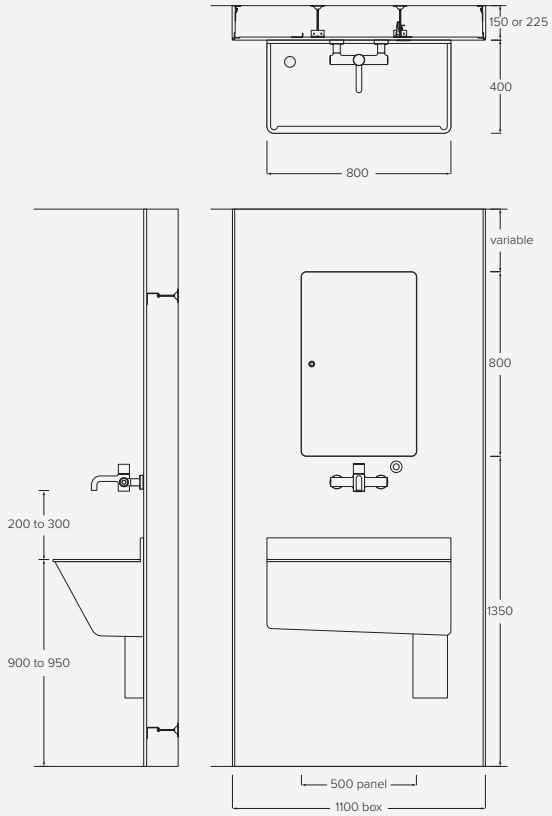

To view product info please see pages 22-23.

Traditional
Frame

Trust System
Frame

Scrub-up trough assemblies SU H2, SU H3

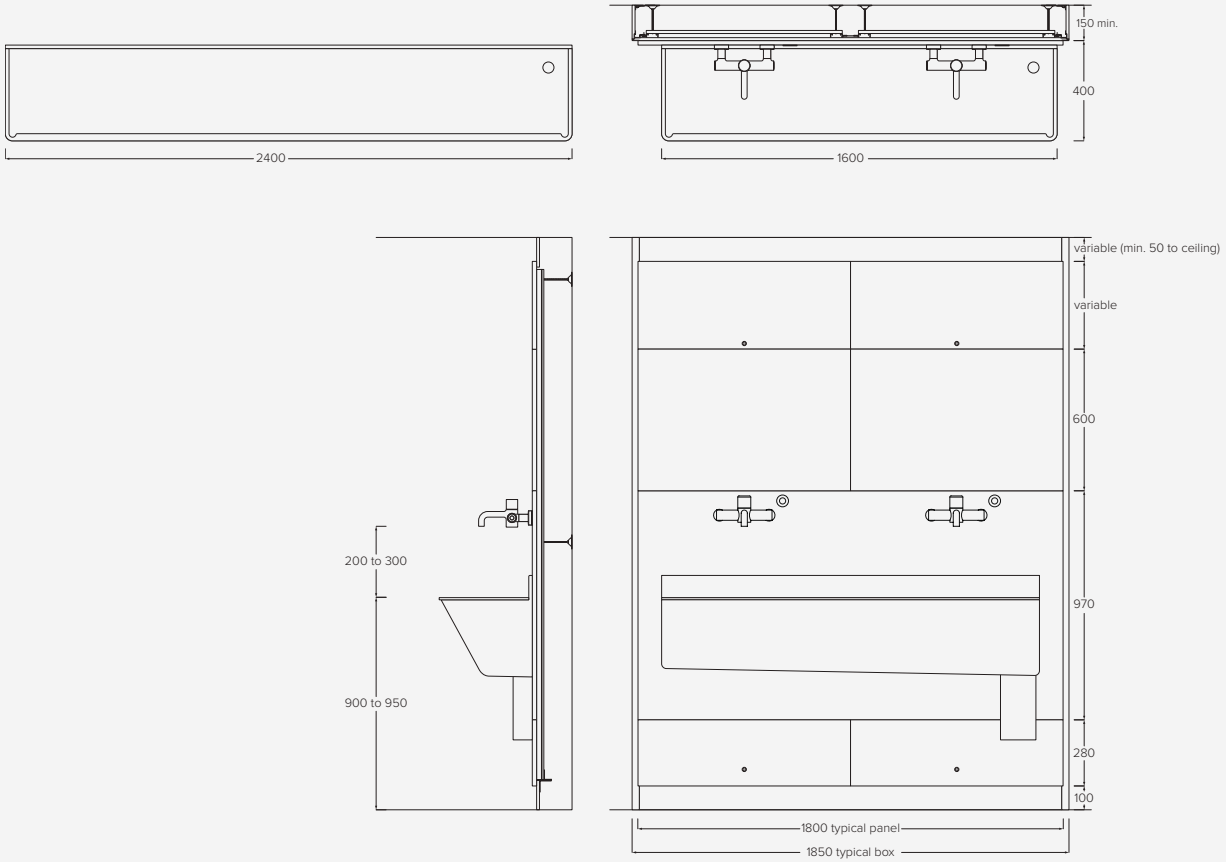

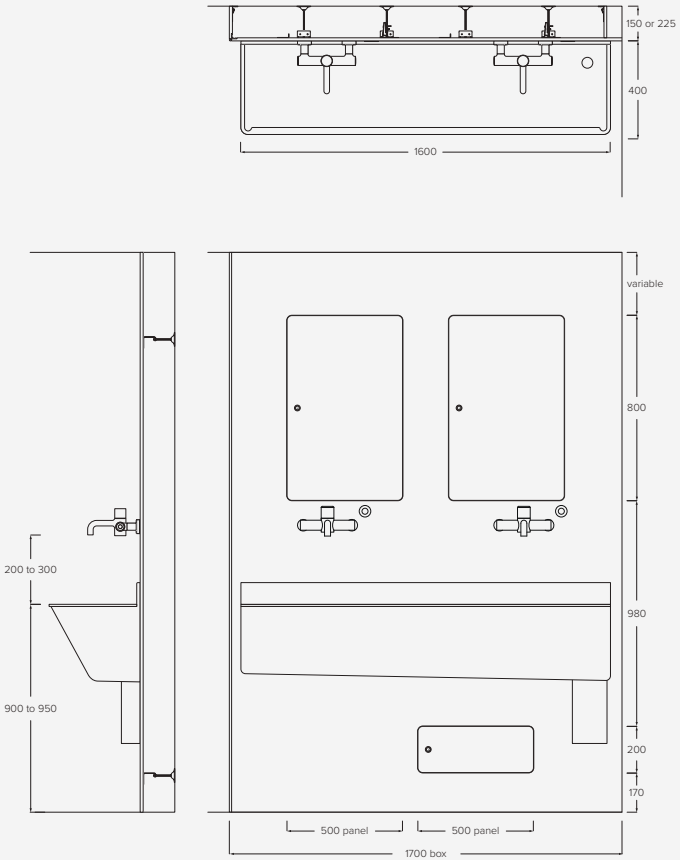

Postformed edges not available on HPL panels wider than 1250mm.

To view product info please see pages 24-25.

Traditional
Frame

Trust System
Frame

Sink and sink top assemblies ST A, ST B, ST C

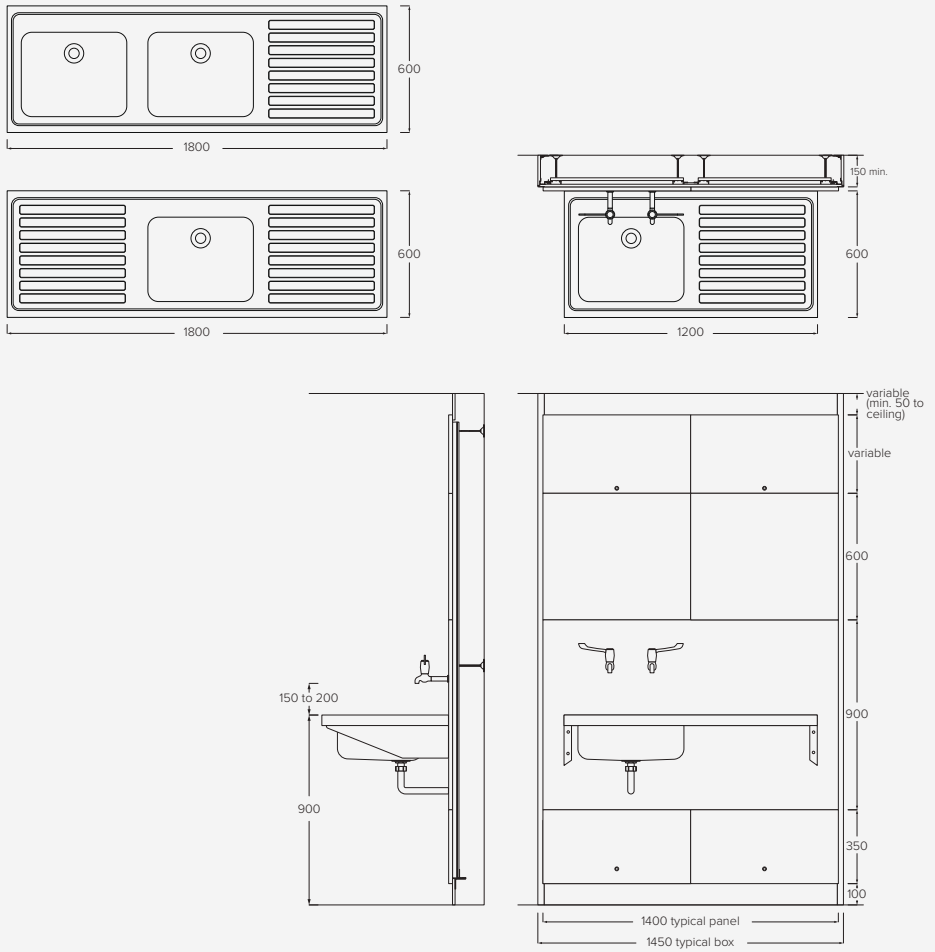

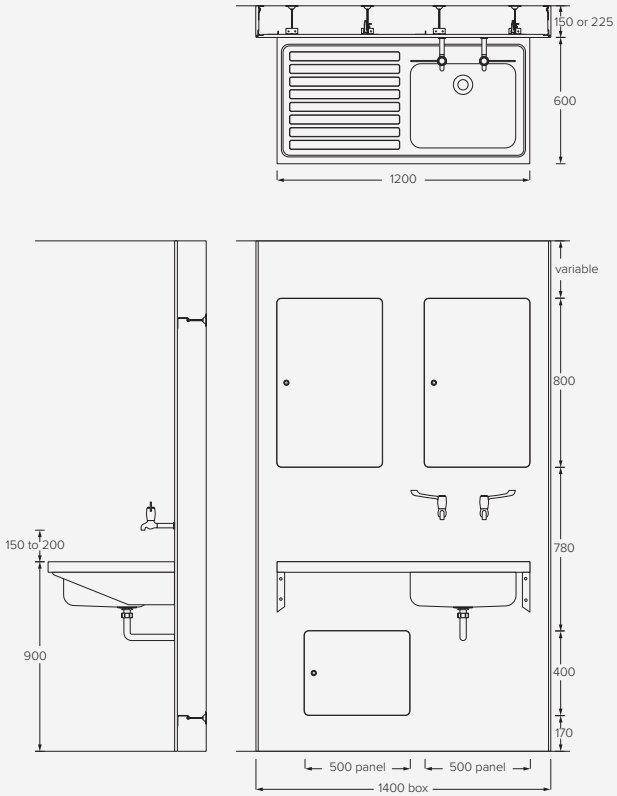

Postformed edges not available on HPL panels wider than 1250mm.

To view product info please see pages 26-27.

Traditional
Frame

Trust System
Frame

Sink and sink top assemblies SK 1, SK 2

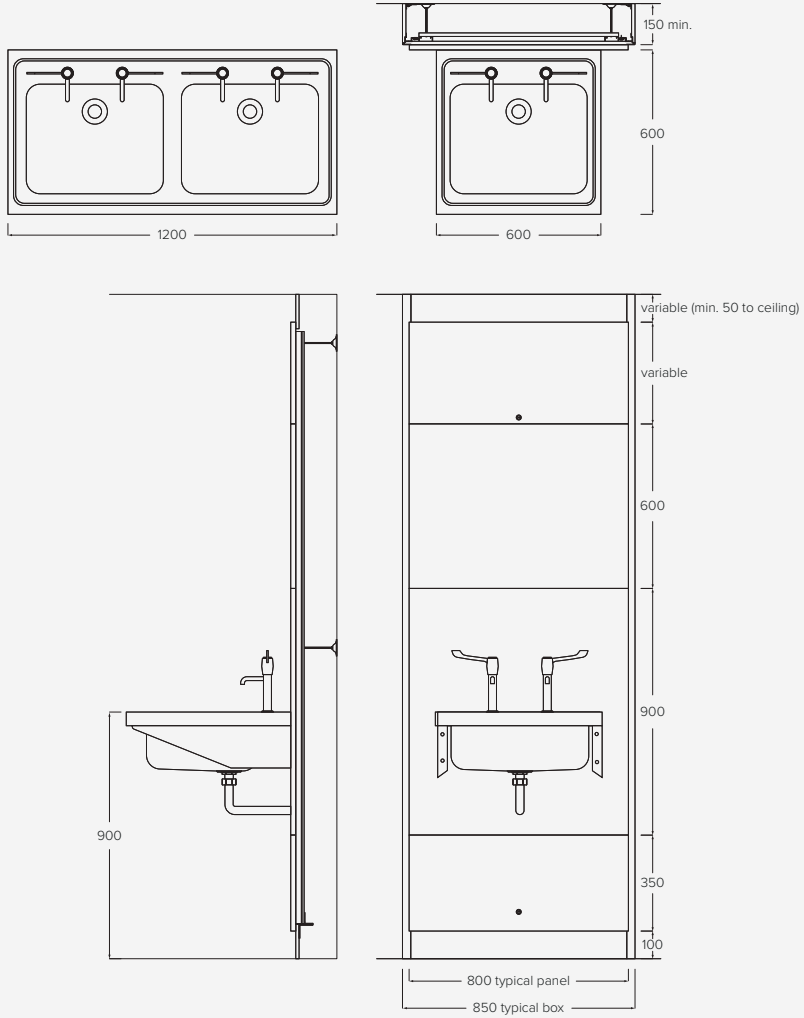

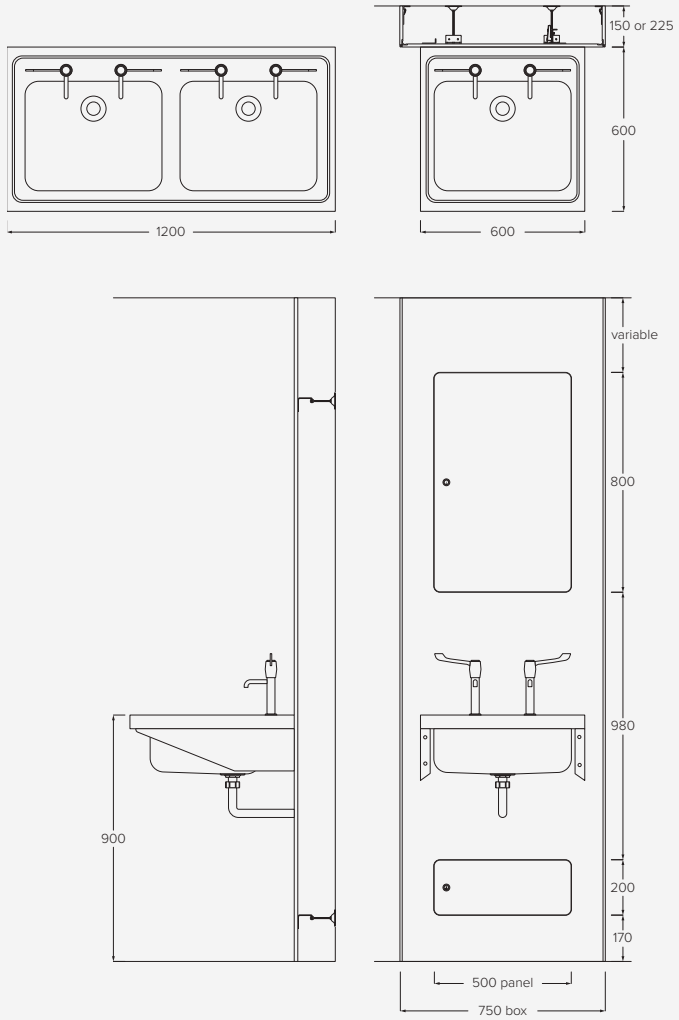

To view product info please see pages 28-29.

Traditional
Frame

Trust System
Frame

Basin assembly LB H M

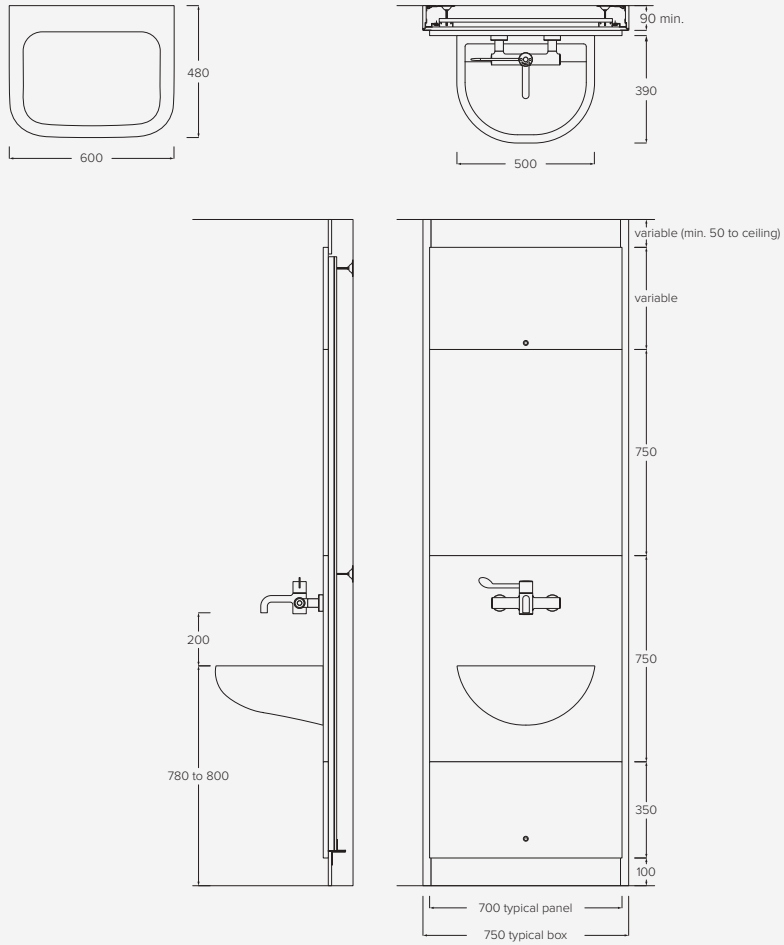

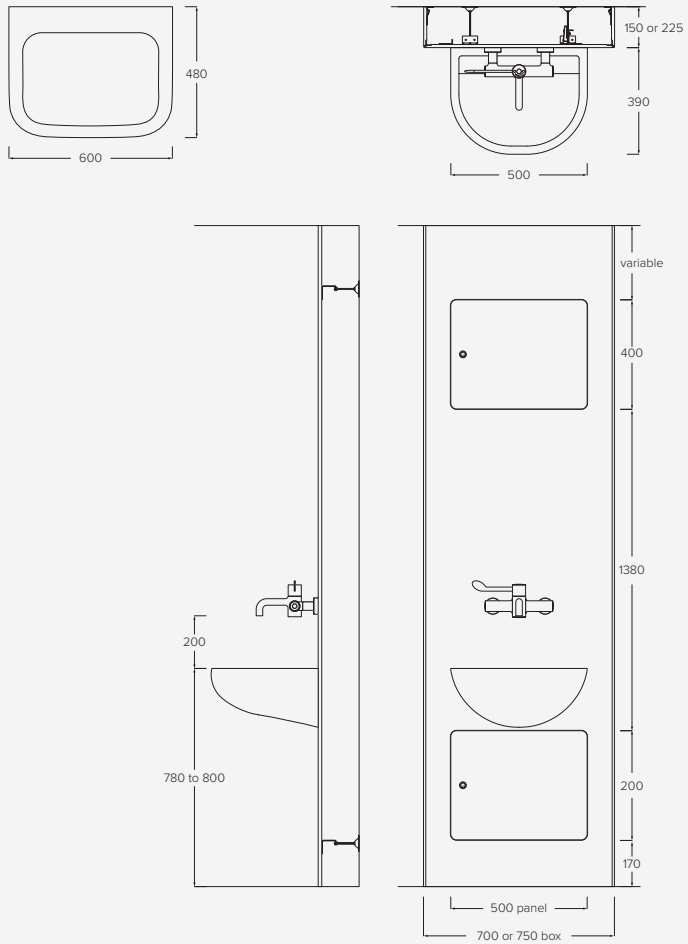

To view product info please see pages 30-31.

Traditional
Frame

Trust System
Frame

Basin assembly LB G M, LB G L

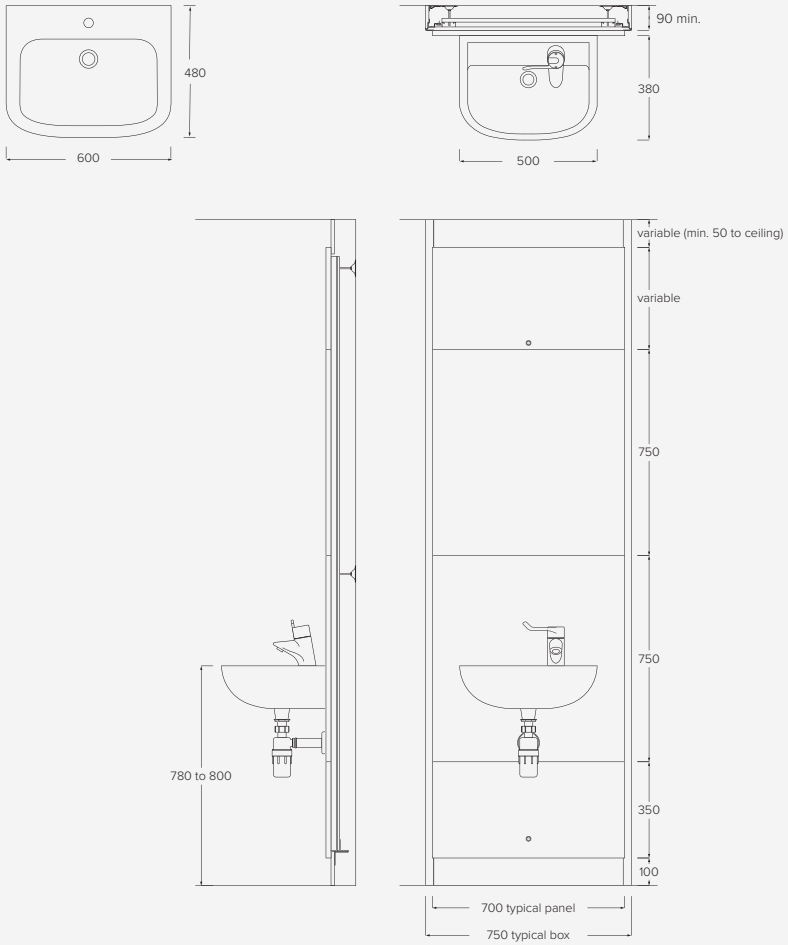

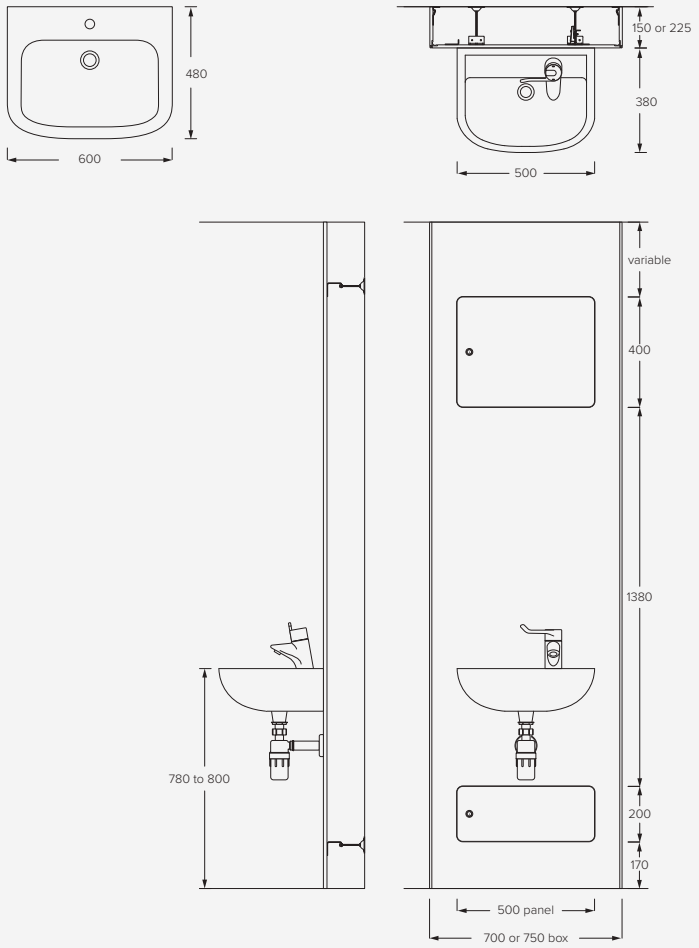

To view product info please see pages 32-33.

Traditional
Frame

Trust System
Frame

Basin assembly LB G S

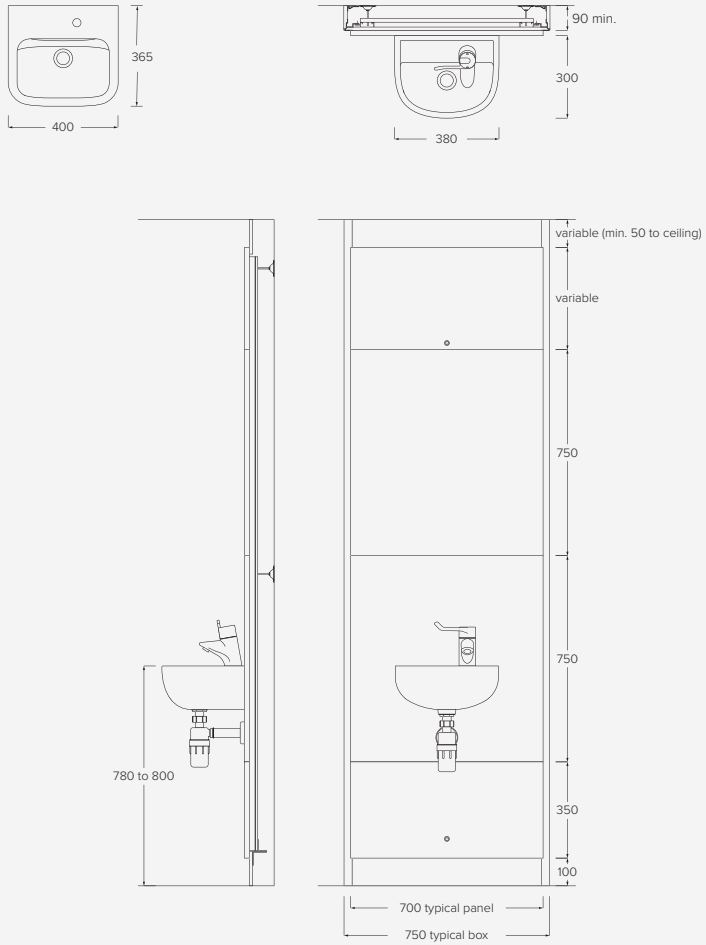

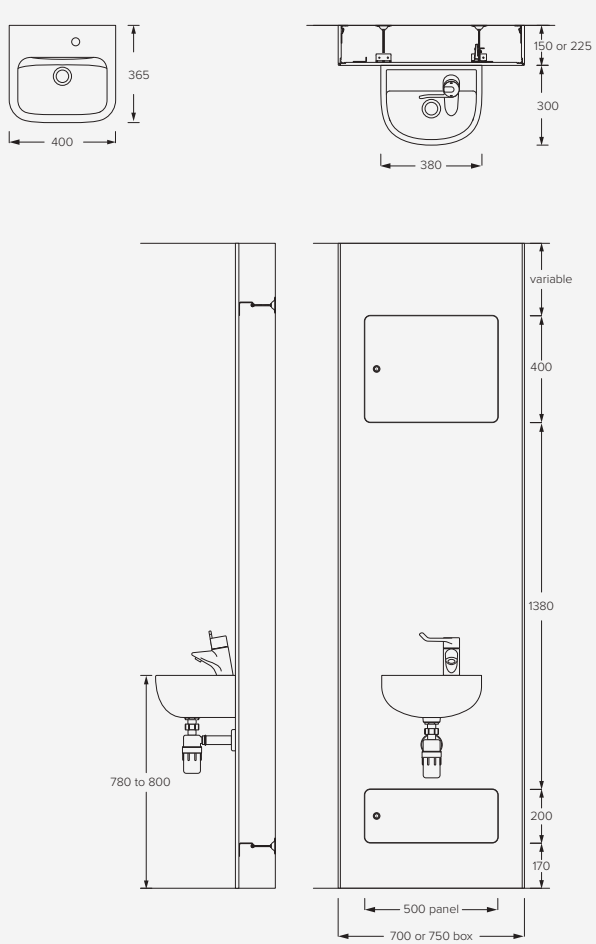

To view product info please see pages 34-35.

Traditional
Frame

Trust System
Frame

WC WC H

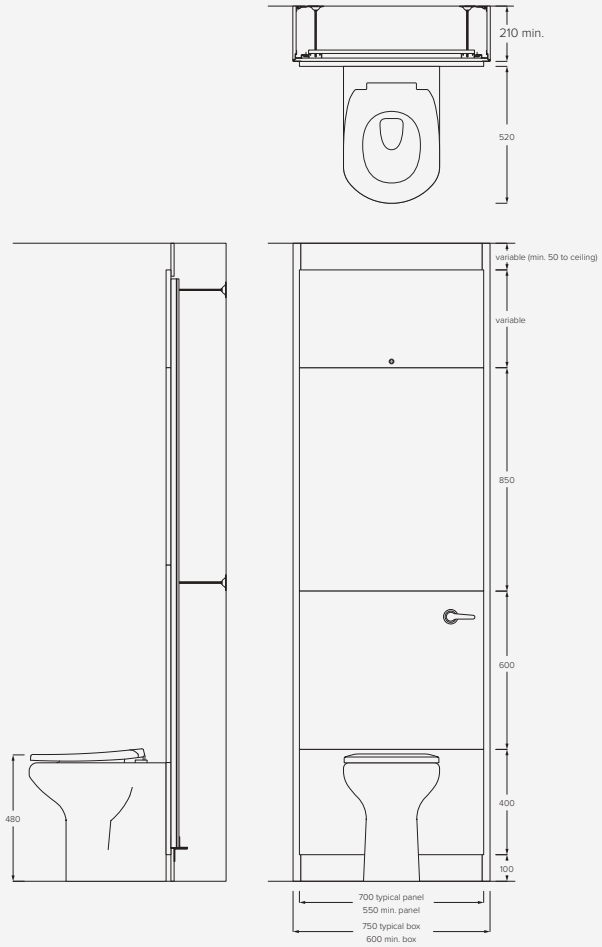

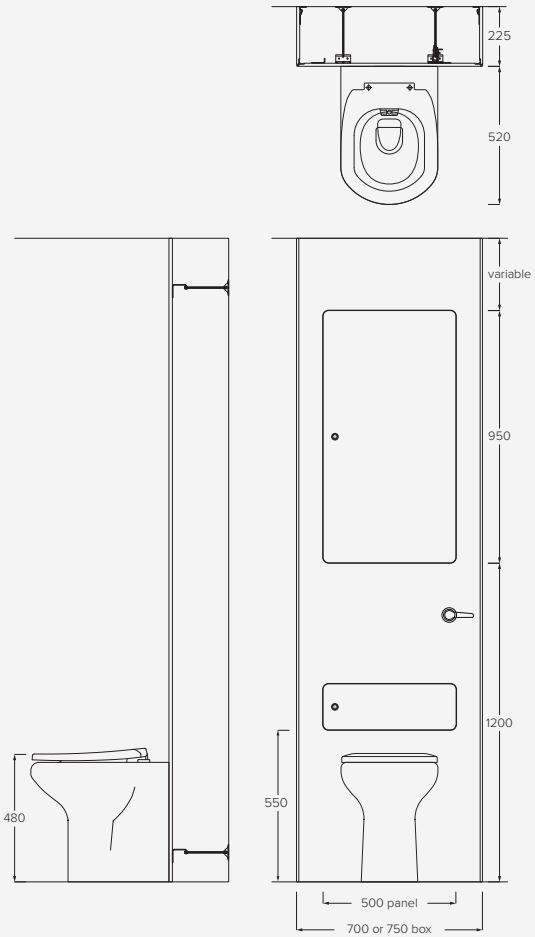

To view product info please see pages 36-37.

Traditional
Frame

Trust System
Frame

WC WC HD

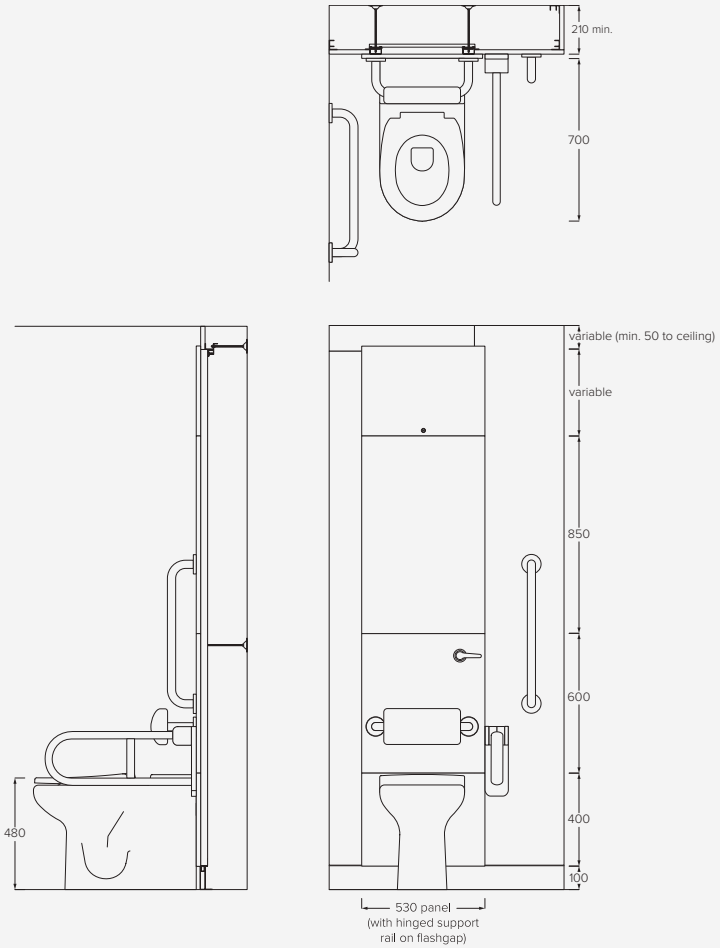

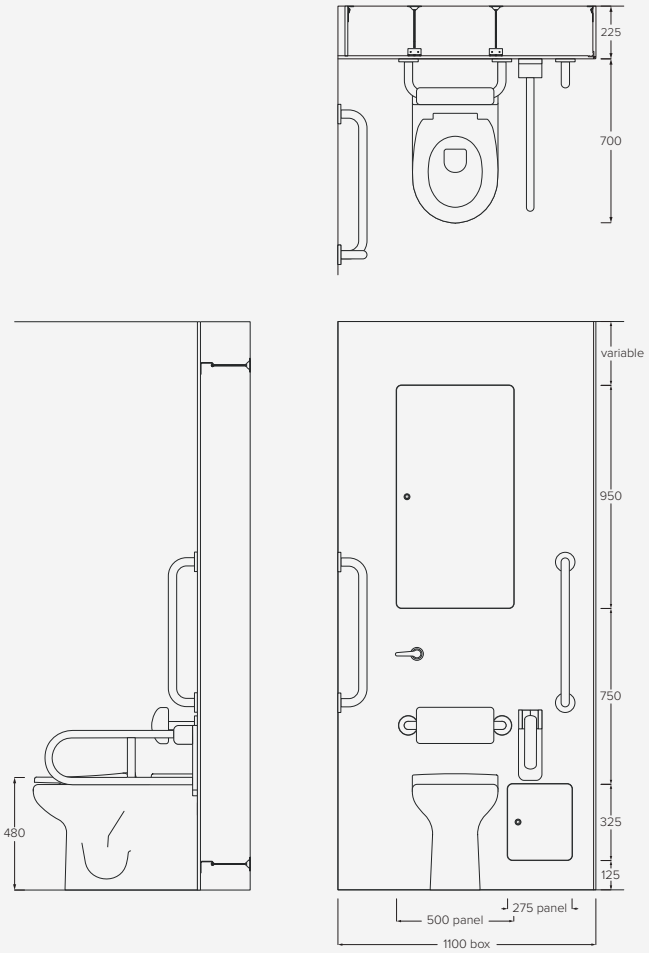

To view product info please see pages 38-39.

Traditional
Frame

Trust System
Frame

Typical ensuite and assisted WC areas

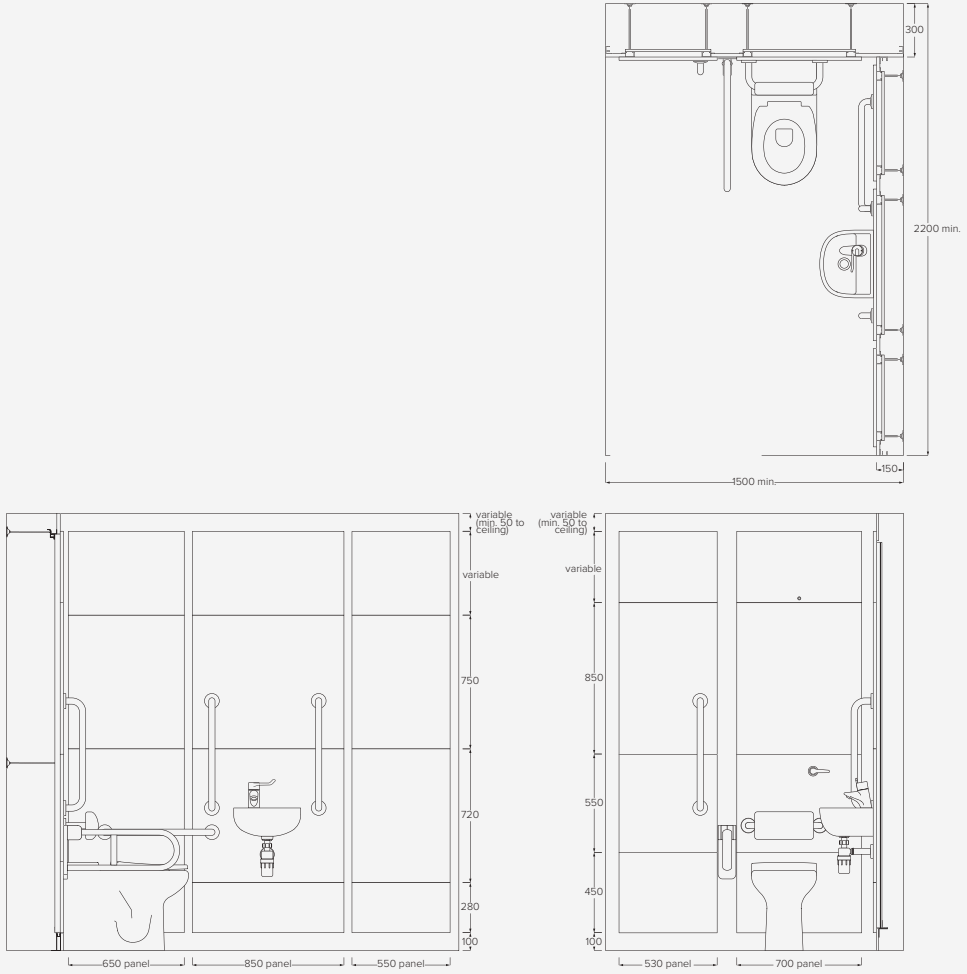

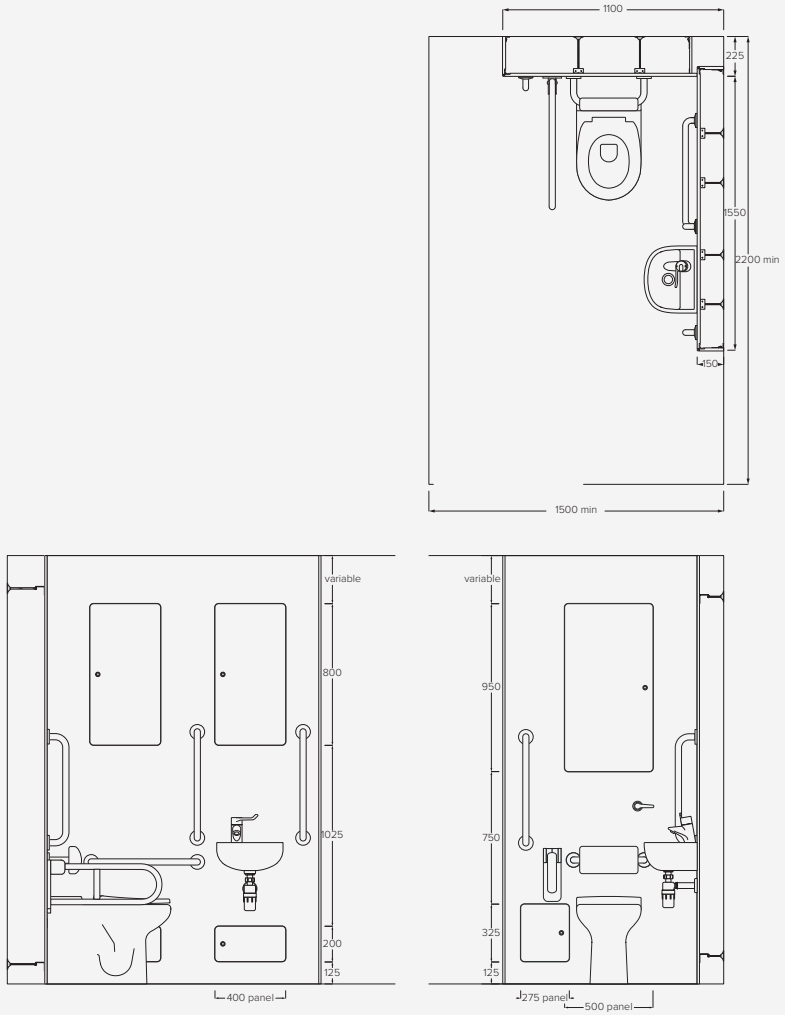

To view product info please see pages 40-41.

Traditional
Frame

Trust System
Frame

Typical shower assembly TM1

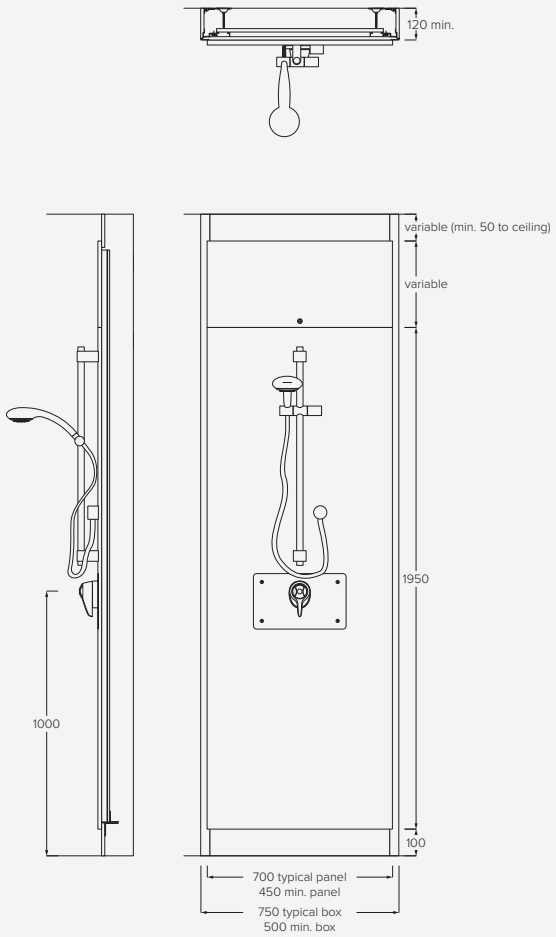

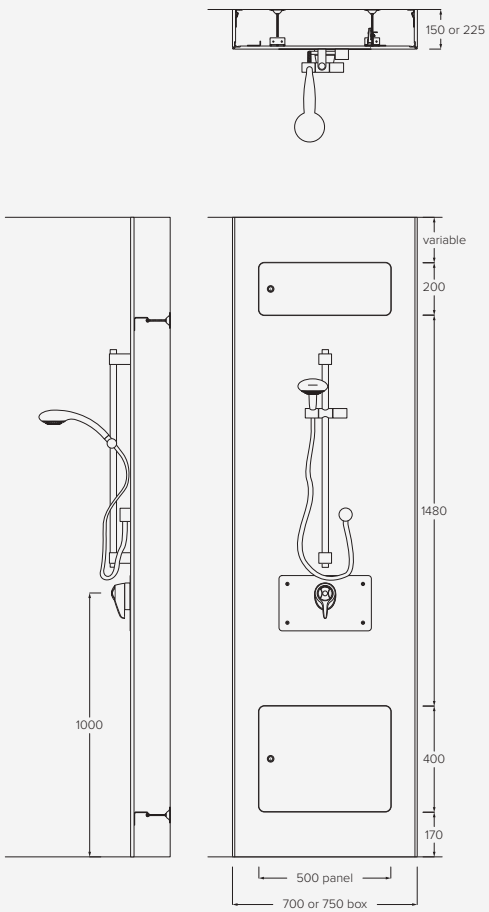

To view product info please see pages 42-43.

High risk with back to wall WC

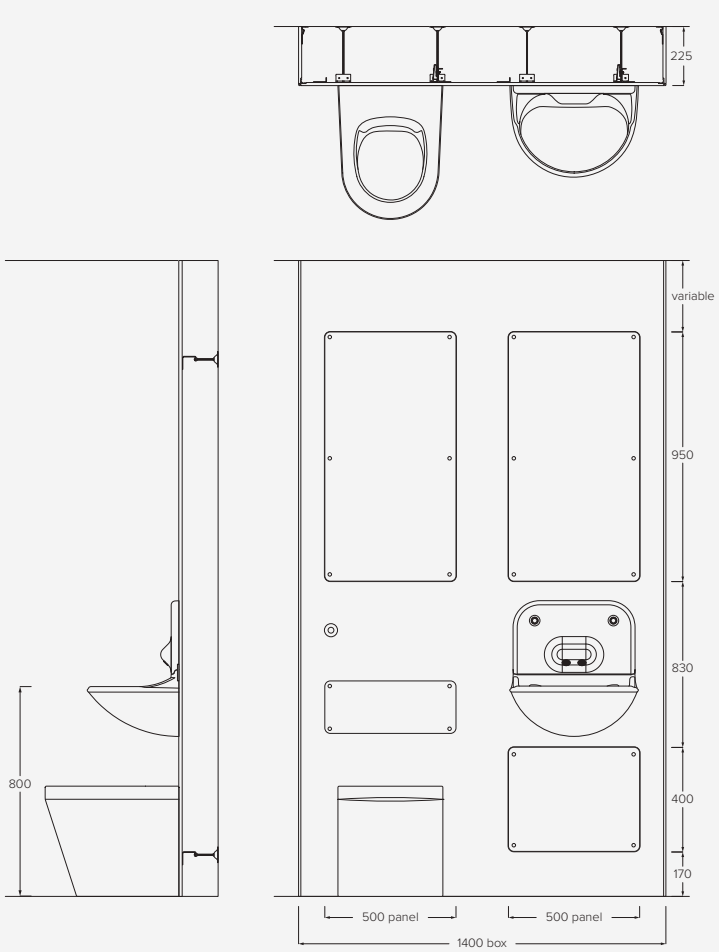

To view product info please see page 46.

Reduced Ligature
Trust System Frame

High risk with wall hung WC

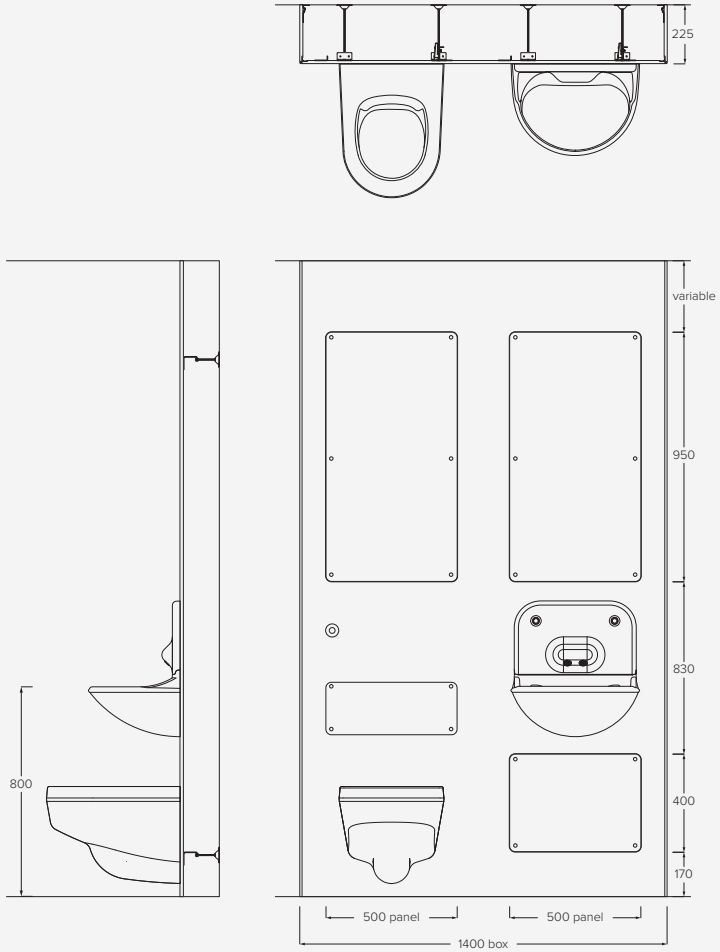

To view product info please see page 47.

Panel performance options

Performance specification

Wet areas/Mental health

Areas subject to prolonged moisture, eg showers/baths or areas of high abuse.

Please note: There is no specific performance specification stipulated within HTM 68. The panel specification opposite is Bushboard's recommended option.

Typical panel specification

Solid Grade Laminate (SGL)

Solid Grade Laminate, 1400kg/m³ impervious to water, suitable for the most demanding environments where strength and/or water resistance are needed.

- Finished panel thickness 13mm*
- Polished radiused black edges

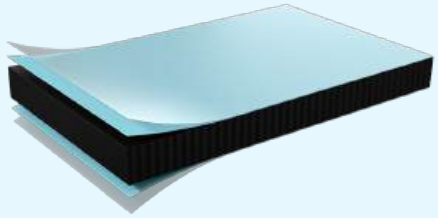

Heavy duty

High frequency use by public and others in areas where medical/nursing procedures are carried out and where assemblies may be damaged by wheeled equipment, accident or mis-use.

High Pressure Laminate (HPL)

High Pressure Laminate bonded onto 630kg/m³ density moisture resistant chipboard, suitable for dry environments with more intense use.

- Finished panel thickness 18mm*
- Panels supplied square edge with matching 1mm pvc lipping or postformed vertical edges

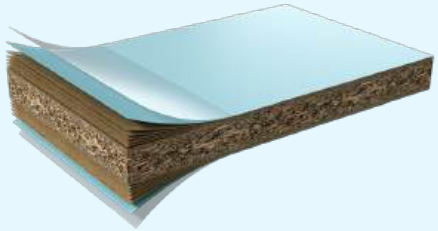

Trust System Specification

Solid Grade Laminate (SGL)

Solid Grade Laminate, 1400kg/m³ impervious to water, suitable for the most demanding environments where strength and/or water resistance are needed.

- Finished panel thickness 13mm*
- Polished radiused black edges

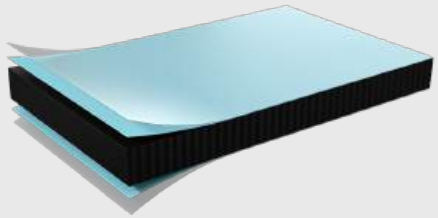

All Bushboard RPM units for Healthcare are bespoke manufactured, contact us for further details. Please see our separate colour selector for full details.

All 1mm pvc lipping applied with PUR adhesive. HPL is not suitable for wet environments.
* Nominal thickness.



Expert service and support

Our industry expertise has been acquired through some of the largest PFI healthcare projects in the UK as well as minor refurbishments. Our professional service is delivered through a flexible approach to product design and manufacture and a dedicated Healthcare project team.

From planning to completion, we work with specifiers and contractors offering specialist technical advice, as well as support on planning, product specification and compliance with appropriate regulations including load testing, acoustic data and fire wall standards. Our Technical Project Managers work with contractors on site to ensure individual projects are successfully delivered.

We offer an NBS specification writing service, sample service and CAD blocks, which are available to download from our website:
www.bushboard-washrooms.co.uk



Acts and Regulations

Bushboard Ready Plumbed Modules for Healthcare meet the following required standards:

- Health Building Note 00-10 Part C: Sanitary Assemblies
- The Equality Act 2010
- The Water Supply (Water Fittings) Regulations 1999
- The Water Supply (Water Fittings) Regulations 1999: WC Suite Performance Specifications
- The revised Healthcare Cleaning Manual 2009

Bushboard Healthcare systems

"This is the first time that we have dealt with Bushboard. If I had to comment on one thing, it would be their excellent customer service. All contacts have been extremely patient and informative throughout the process; their main objective being to ensure that we are happy with both products and service."

Paul Watson, Finance Manager, Leeds Student Medical Practice

bushboard
WASHROOMS THAT WORK

Bushboard Washroom Systems Ltd
Unit 1400 1st Floor Montagu Court
Kettering Parkway
Kettering Venture Park
Kettering
Northants
NN15 6XR

T 01536 533 620
E washrooms@bushboard-washrooms.co.uk

www.bushboard-washrooms.co.uk

After Sales and Customer Care
T 01536 533 667

Colours in this brochure are as accurate as the printing process allows. Bushboard Washroom Systems Ltd reserves the right to alter or change specification without notice.