FOOT-WASH *Pro*

Automatic Footbath for Cows



KINGSTON®

fabdec Group

FOOT-WASH Pro

Automatic Footbath for Cows



Key features and how it works:

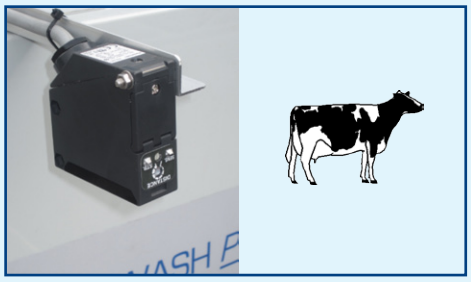

Cow Counter

The counter is set according to the number of cows using the bath. It counts them automatically.



Full-width Pneumatic Drainage

Drainage of the bath starts once the set number of cows has passed through it. The full-width pneumatic gate drain means the dirty water is emptied out quickly and effectively.



Rinse with Powerful Spray

The bath is automatically rinsed with a powerful spray.
The spray bar is adjustable to achieve the required direction of spray.

Control Box





Quick Refill

The bath is then quickly refilled with clean water using a high capacity pump 220 l/min 1.85kW (2.5HP) and 3 large fill nozzles.



Automatic Dosage

Hoof care product can be added to the bath during refill using the high volume dosage pumps.
The system is delivered with 2 x 24V DC 4.6l/min dosage pump for use with different treatments.

High Volume Dosage



FOOT-WASH *Pro*

Automatic Footbath for Cows

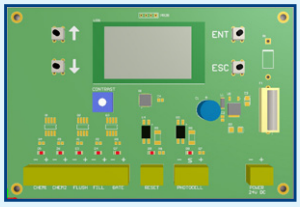

Easy Control with LCD Display

Features include:

- Automatic, adjustable cycles including for a.m., p.m. and evening
- Weekly or fixed chemical schedule
- Chemical pump prime function





Connections and plumbing on both sides of the bath

This provides a flexible and simple installation

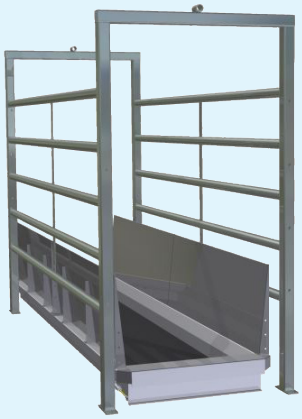

Side panels and rails are an option depending on the site of installation. Illustration shown is a guide only.

Why use FOOT-WASH *Pro*?



How often do you use the footbath? And how often do you replace the water? On most farms there is simply not enough time. However, not replenishing the solution regularly can make the footbath spread infections.

FOOT-WASH *Pro* deals with these issues in an efficient way.

1. The cows are counted automatically.
2. When the set number of cows has passed through, the drain opens automatically.
3. The gate is as wide as the footbath so the used liquid can drain quickly.
4. The footbath tray is cleared with a powerful jet spray.
5. The gate closes again.
6. The footbath is refilled with fresh water.
7. A hoof care product can be added using 1 of the 2 pre-selected dosage pumps.

An expert's opinion:

Lameness in dairy cows is an underestimated problem. In a British study of more than 220 dairy farms the farmers estimated that about 7% of the cows were lame. However, on examination vets found that the actual figure was close to 36%.

Lameness causes high losses. Lame cows eat less, produce less milk, have more problems with metabolism and fertility, and require more labour. Experts estimate the total annual cost per cow is up to 740 pounds sterling (Mülling and Hagen, 2012).

If you want to get a grip on infectious hoof diseases, especially Dermatitis Digitalis, the regular use of a footbath is essential.

Features and Dimensions

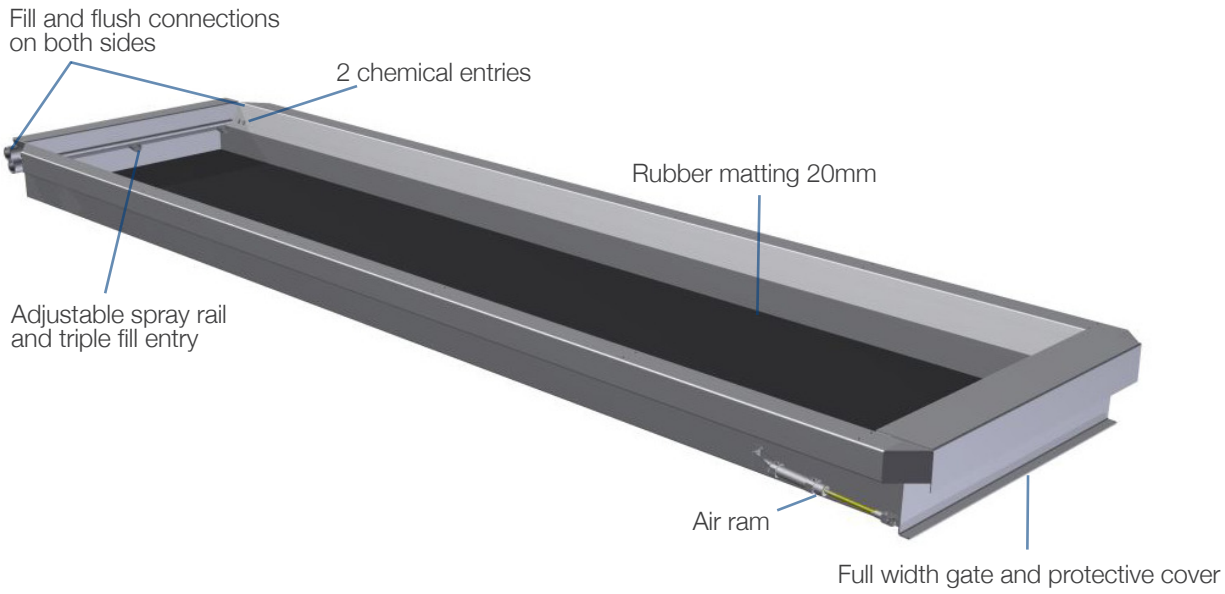

Standard dimensions:

Total length: 3065mm
Total width: 835mm
Bath width (standing area): 660mm
Total height: 180mm
Bath height: 115mm

Please note:

The following models are also available (total length):

- 1.8 metres length (1865mm; ideal for robots)
- 2.0 metres length (2060mm)
- 2.5 metres length (2565mm)
- 3.6 metres length (3665mm)
- 4.0 metres length (4065mm)

www.fabdec.com

Fabdec Group
Grange Road, Ellesmere, Shropshire, SY12 9DG
Tel: +44 (0) 1691 627200
Email: sales@fabdec.com

Fabdec GmbH
Gerhardstrasse 5, 45892 Gelsenkirchen, Germany
Tel: + 49 (0) 209 700 900
Email: germany@fabdec.com

Product information is subject to modification, please verify exact specification with Fabdec.
Brochure_EN_FootwashPro_250320