Precision ball screws

THOMSON™

Linear Motion. **Optimized.**

www.thomsonlinear.com

THOMSON™

Linear Motion. ***Optimized.***

Thomson –
Linear Motion. ***Optimized.***

The ideal solution often is not found in the fastest, most robust, most precise or even the most inexpensive option. The ideal solution is more likely to be characterized by an optimum relationship between performance, service life and costs.

Thomson is best positioned to assist you in quickly defining the optimum linear drive solution for your application.

- **Thomson developed friction-free linear bearing technology. We have the most comprehensive standard range of equipment in mechanical drive technology in the sector.**
- **Customized modification of standard products is routine work for Thomson. Individual complete solutions across the entire portfolio**
- **Choose Thomson and gain access to over 70 years of global application experience in diverse industries including packaging, factory automation, material handling, medical, clean energy, printing, automotive, machine tool, aerospace and defense.**
- **As part of the Danaher Motion Group, we are financially strong and unique in our ability to bring together control, drive, motor, power transmission and precision linear motion technologies.**

Thomson is the name you can trust for quality, innovation, on-time delivery, controlled costs, and reduced risk.

A wealth of product and application information is available online at www.thomsonlinear.com. Also online are downloadable 3D models, software tools, our distributor locator and global contact information for Thomson. For immediate assistance in Europe, telephone us on +49 (0)7022 504 0 or e-mail us at sales.germany@thomsonlinear.com.

Talk to us early in the design process to see how Thomson can help identify the optimal balance of performance, life and cost for your next application. Call any one of our more than 2000 distribution partners around the world for fast delivery of replacement parts.

The Danaher Business System -
making sure your company has a sustainable competitive edge

The Danaher Business System (DBS) was established to adapt our work more effectively to our customers' requirements. DBS is a sophisticated and powerful set of tools which we use on a day-to-day basis as part of our process of continually improving our manufacturing and product development processes. DBS is based on the Kaizen principles which advocate a continuous and rigorous approach to eliminating waste across all areas of a company. DBS is geared towards achieving ground-breaking results throughout the entire company with a view to generating a competitive edge in terms of quality, delivery and performance that can be passed on to you, the customer. The advantages achieved enable Thomson to offer not only shorter times to market, but also an unbeatable product range, and unrivalled service quality, reliability and productivity.

Local support all round the world
Application Centers, Global Production Processes, Global Design and Development Centers

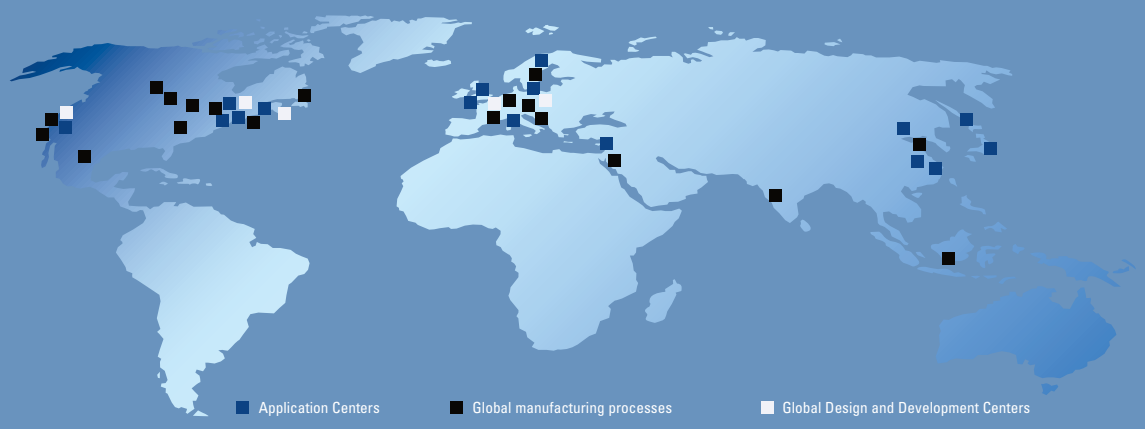

Table of contents

Requirements on a lead screw 4

Recirculating ball screws
Recirculating ball screws 6
General technical data for recirculating ball screws 7
Standard manufacturing program 8
Preloading methods 9
Tolerance classes 10
Ball screw nuts 11
General information regarding rolled ball screws 13
Rolled ball screw shafts 14
Nuts for rolled ball screw shafts 16
General information regarding peeled/ground ball screws 26
Standard range for peeled recirculating ball screws 28
Nut dimensions with DIN flange for peeled recirculating ball screws 36
Standard range for peeled heavy duty recirculating ball screws 37
KOKON recirculating ball screw 39
Bearing units for ball screws - fixed bearing 42
Bearing units for ball screws – loose bearing 44
KON adapter support 46
KAR universal joint adapter 47
SF helical spring cover 48
Calculation/installation 50
Acceptance conditions 54
Materials 57
Lubrication 58

Trapezoidal thread screws
General technical data for trapezoidal thread screws 62
RPTS trapezoidal-thread screws 63
Trapezoidal thread nuts 64
KON adapter support 69
KAR universal joint adapter 70
End journals for loose bearings/fixed bearings 71
Calculation 74
Splined shafts 82
Sliding sleeves 83
Installation and maintenance 84
Trapezoidal thread screw order code 85
Precision lead screws and Supernuts® 88
Graph of critical rotational speed limit values 89
Graph of critical buckling force 90
Lead screw product features 91
Ordering information 92
XC and AFT3700 series 93
SB and MTS series 94
Metric stainless steel precision trapezoidal thread lead screw shafts 95
Lubrication 96
PTFE dry lubricant 97
Inquiry form 98
Applications 99
Dimensions, drilling patterns and forms of ball screw nuts 100

What do you want from today's thread drives?

The principle behind the thread drive is incredibly easy to grasp. And yet, all kinds of demands are made of these drives in practice and there is a wide range of designs in use. Apart from technical requirements, the issue of cost is becoming increasingly important. This presents the user with the following challenges:

How can the costs associated with procurement, manufacture and installation be reduced?
Increasing pressure in terms of costs and the need for greater flexibility call for short delivery times and attractive prices when it comes to procuring the components to be used. This involves taking individual customer requirements into account right from the start.

How can I make my system more reliable?
Components are expected to deliver high levels of accuracy and quality as well as low maintenance costs.

How can I make my system more cost-effective?
When combined with the right thread drive, high speeds and more power make it possible to use a system more cost-effectively.

Thomson Neff lead screws: We can offer the right solution for your motion task

Thomson Neff is the world's leading manufacturer of lead screws. Our products are used in some of the most demanding sectors of industry. Example applications include machine tools, handling machinery, technical devices used within the field of medicine and aviation technology.

Our varied product range is bound to contain the right drive for almost any motion task: from very small custom thread drives for highly sensitive medical devices right through to ball screws for high-performance machine tools with very high demands in terms of speed and stiffness.

We have made it our business to provide our customers with the perfect solution for their applications, whatever their requirements in terms of loads, speed, stiffness, accuracy, service life and reliability. Thanks to our 40 years' experience and impeccable quality management, we can guarantee you the very highest levels of performance, quality and reliability.

Recirculating ball screws

Our ball screws are ideal for use in all technological and mechanical engineering applications. These mainly include:

- Machine tools
- Aircraft construction
- Wood working
- Handling equipment, industrial robots
- Printing and paper machines
- Traffic engineering
- Medical equipment
- Measuring technology
- …

A ball screw is a driving element for converting rotary motion into axial motion and vice versa. A ball screw consists of a ball screw shaft, a ball screw nut featuring a ball return and the balls themselves.

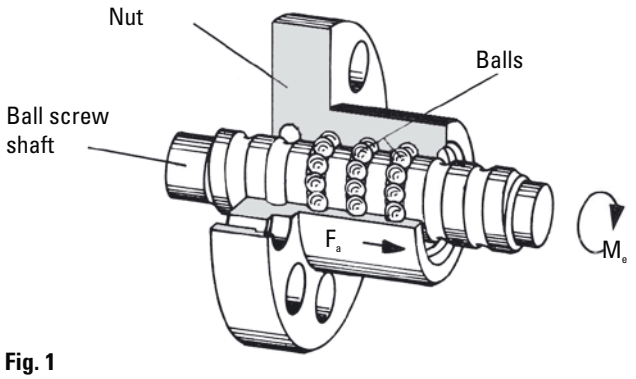

Fig. 1

Action: Torque M ❋→ Reaction: Force F_a

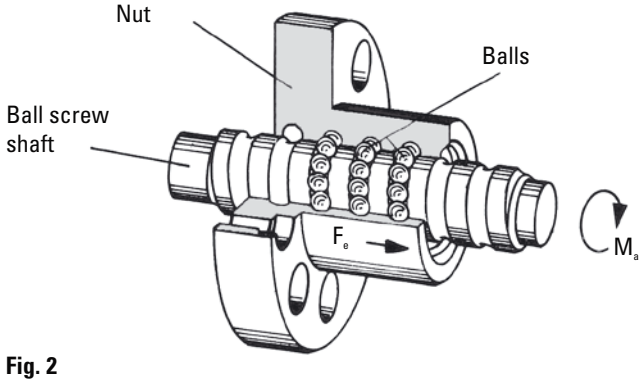

Fig. 2

Action: Force F ❋→ Reaction: Torque M_a

The balls, which roll between the screw shaft and the nut, offer optimum levels of efficiency (up to 98%).

As a result, ball screws, unlike trapezoidal screws, are not capable of self locking.

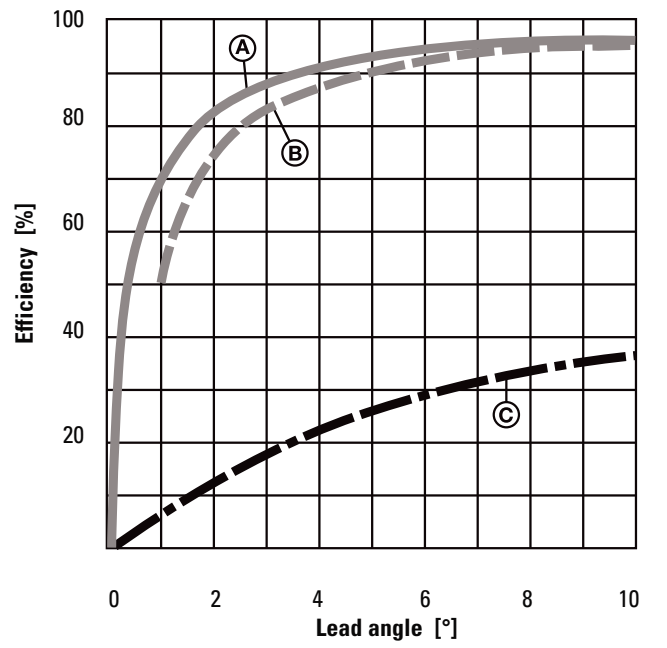

Ⓐ Efficiency for ball screws according to Fig. 1
Ⓑ Efficiency for ball screws according to Fig. 2
Ⓒ Efficiency for trapezoidal screw

Advantages of ball screws compared to trapezoidal screws:

- More accurate positioning throughout service life
- Less wear, longer service life
- Less drive power required
- Less heat generated
- Higher travel speeds
- No stick/slip effect

General technical data for recirculating ball screws

Manufacturing process

THOMSON NEFF recirculating ball screws are manufactured in rolled, ground and peeled versions. Both shaft and nut have a gothic arc profile. The load angle is 45°.

Speeds

The permissible speed limit is currently 3000 rpm, up to 4500 rpm for spot measurements. This speed limit identifies the maximum speed that may only be used under optimum operating conditions.

Mounting position

The mounting position of a lead screw may be selected freely. The only factor to be taken into consideration is that all radial forces generated must be absorbed by external guides.

Precision

Rolled Thomson Neff ball screw shafts are available in tolerance classes P3, P5, T5 and T7.
Ground/peeled Thomson Neff recirculating ball screws are available in tolerance classes up to P0.

Self-locking

Thanks to their low rolling friction, recirculating ball screws are not self-locking. It is therefore necessary to fit suitable motors with a holding brake, especially if the ball screw is mounted vertically.

Temperatures

All ball screws are designed for ambient temperatures between -30°C and 80°C. Temperatures of no more than 110°C are also permitted for intermittent operations. Ball screws are only conditionally suited for temperatures below freezing.

Repetition accuracy

The repetition accuracy refers to the capability of a lead screw to return again to a set position it has previously traveled to under the same conditions. It corresponds to the mean position scatter range as defined in VDI/DGQ 3441. Repetition accuracy is influenced by factors including:

- Load
- Speed
- Deceleration
- Direction of movement
- Temperature

Standard manufacturing program

Nominal lead P_{h0} [mm]	Sizes used – Nominal diameter d_0 [mm]											
	12	16	20	25	32	40	50	63	80	100	125	160
4	●											
5	●	●○	●○	●○	●○	●○	●					
10	●	●	○	●○	●○	●○	●○	●○	●○	○	○	
15					○	○		○				
20			●	●	●	●○	●△○	●△○	○△	○△	○△	○△
25				●			△	○△	○△	○△	○△	○△
30									○	○	○△	○△
32					●							
40					●	●				○	○	
50			●	●								

● = rolled (stock item) ○ = ground/peeled △ = heavy duty ground/peeled

Precision drives us on

Our range complies with DIN 69051 and ISO 3408. All nuts, both flanged and cylindrical nuts, are available with connections complying with DIN specifications.

Every shaft can be supplied with customized end journals. On request, customers can also order screws with an annealed end for machining their own end journal.

Preloading methods

If the ball nut unit is preloaded on the ball screw, the following results can be achieved:

- Increased positioning accuracy
- Increased stiffness in the nut area
- Reduced width of backlash

Preloading with 2-point ball contact:

Standard preloading force: 10% of dynamic rated load

Designs:

- VDM preloaded double nut
- VEM-2 and FL preloaded single nut with internal thread shift
- VEM-2 preloaded single nut with internal thread shift between individual threads (only where there is more than one thread)

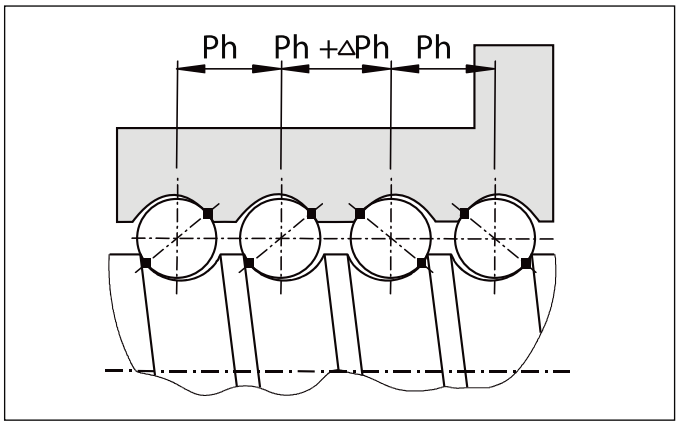

Preloading with 4-point ball contact:

Standard preloading force: 4% of dynamic rated load

Design:

Preloaded single nut with oversized ball bearings VEM-4

Note:

- Allows shorter nut lengths to be used
- Not suitable for all applications due to increased levels of sliding friction, but provides a cost-effective solution in certain cases

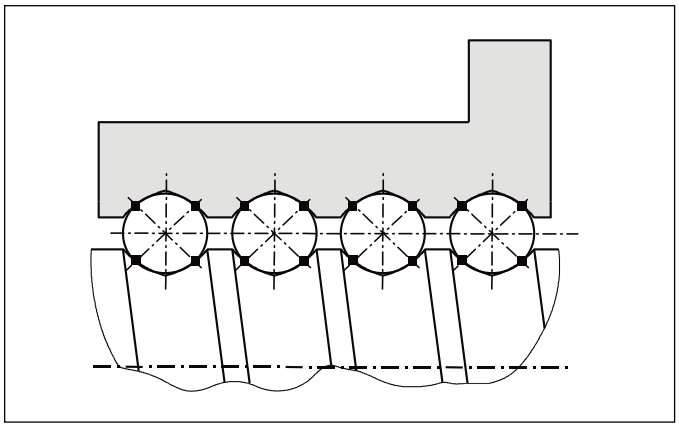

Note:

In the case of lead precisions poorer than P5 and shaft leads ≥ diameter d_0, the unit can only be set to low backlash. The overall length of the nuts can be increased by up to 10 mm as a consequence of the preloading system used.

Single nuts may also be supplied assembled backlash-free on request.
Please contact our technical advice service.

Tolerance classes

P	Positioning ball screws
Indirect measuring system	

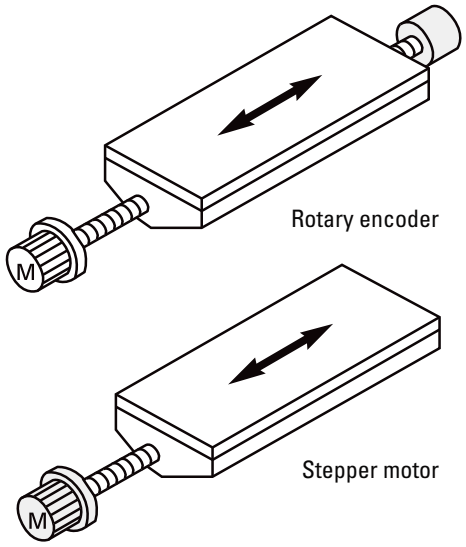

T	Transport ball screws
Direct measuring system	

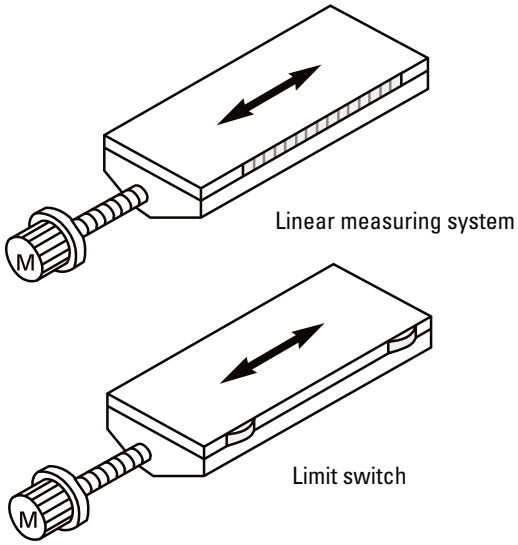

Type and tolerance class	Permissible travel variance over 300 mm travel in µm	Type and tolerance class
P1	6µm	
P3	12µm	
P5	23µm	***T5***
	52µm	***T7***

Standard

Ball screw nuts

THOMSON NEFF ball screw nuts are manufactured as flanged nuts and as cylindrical nuts. They can be combined with all shafts and the relevant end journals. Single nuts with backlash may also be supplied on an assembly sleeve.

Ball screw flanged nuts are manufactured with fixing holes, ball screw cylindrical nuts have a keyway or an external thread.

THOMSON NEFF manufactures ball screw nuts with three different ball recirculation systems depending on the diameter and lead of the shafts used. Profiled wiper rings reduce the escape of lubricant and prevent the ingress of dirt.

THOMSON NEFF ball recirculation systems

Single return (EUS, MUS)

For single-start lead screws

After each turn, the balls are lifted from the shaft raceway and set back by a single turn. THOMSON NEFF return systems made from glass-fiber reinforced plastic or steel guarantee a faultless and gentle recirculation of the balls.
May be supplied for short leads.

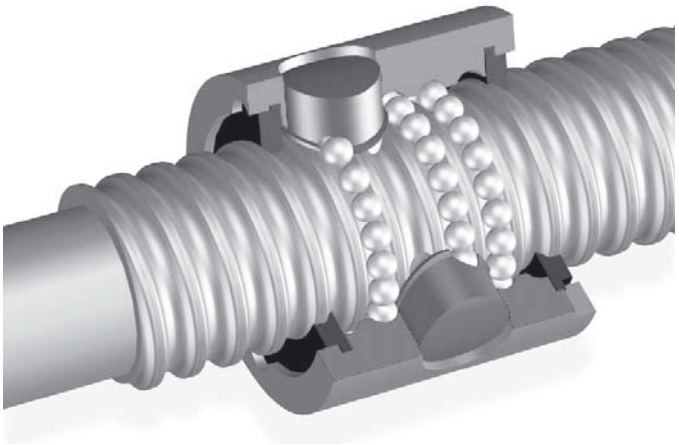

Internal return (channel, insert)

For single-start and multiple-start lead screws.

After several turns, the balls are returned either by a patented plastic recirculation system integrated into the nut or through recirculation channels also integrated into the nut using steel recirculation inserts.

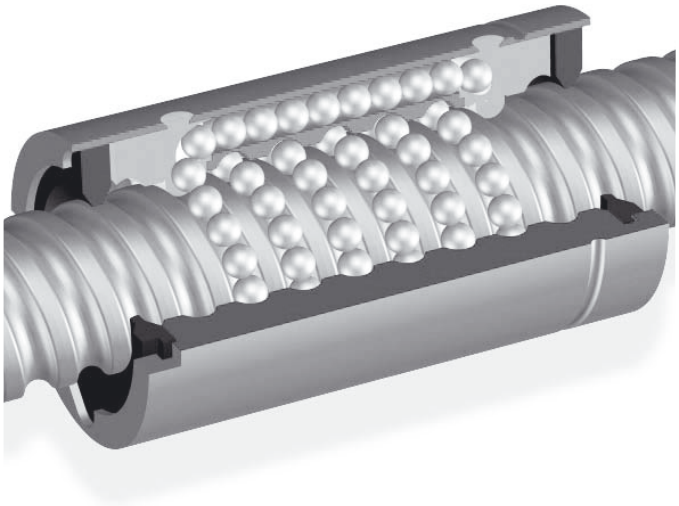

External return (end cap)

For multiple-start lead screws

The balls are recirculated via two special end caps and return channels integrated into the nut.

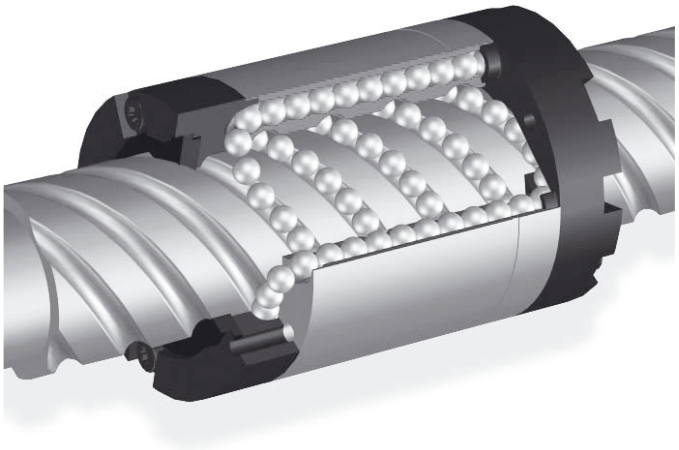

Notes

General information regarding rolled ball screws

Method of manufacture

Thread rolling

Rolled ball screw shafts are manufactured by cold forming without chip removal. In this procedure, the bar stock is given a ball track in a continuous process. This means that it is, in principle, possible to create leads of any amount and to form any number of threads on the ball screw shaft. The shafts are then heat treated and polished. The forming process ensures high strength and a very good surface finish for the ball screw shafts.

Rolled ball screw shafts and the associated standard nuts can be supplied ex stock at favorable prices.

Special nuts to meet particular customer requirements are also possible.

Thomson Neff offers machined ends to the ball screw shafts, such as bearing seats, for instance, both to meet customer requirements and in accordance with common standard forms.

Tolerance classes

Rolled ball screw shafts are available in classes P3, P5, T5 and T7

Lengths

Various maximum shaft lengths are possible as a function of the nominal diameter:

- Nominal diameter ≤ 12 mm: Maximum shaft length 3000mm
- Nominal diameter > 12 mm: Maximum shaft length 6000mm

Thomson Neff's rolled shafts have been setting the standard for many years:

- Very low surface roughness thanks to the non-cutting rolling process and finishing polishing
- Longest service lives thanks to optimized profiles and the maximum number of threads while simultaneously using large balls
- Greatest quality and stable running thanks to patented ball circulation systems
- Decades of experience in the manufacture of rolled and ground ball screws

Nuts

A wide range of stock nut styles are available for you to use with our rolled shafts.

- FK, FH, KGF-D style flanged nuts with dimensions complying with DIN 69051
- KGF-N style flanged nuts with a round flange and dimensions complying with the Thomson Neff standard
- internally preloaded FL style flanged nuts with dimensions as specified in DIN 69051
- ZG style cylindrical nuts with external thread with dimensions complying with DIN 69051
- KGM-D style cylindrical nuts with keyway with dimensions complying with DIN 69051
- KGM-N style cylindrical nuts with keyway with dimensions complying with Thomson Neff standards

KGF-D style nuts can be combined with KGF-D or KGM-D style nuts to create preloaded nut units. The same is true for KGF-N style nuts which can be combined with KGF-N and KGM-N style nuts. Please contact our technical advisory service for further options with regards to preloaded nuts. On request, you may also have our nuts mounted backlash-free or with low backlash.

Rolled ball screw shafts

Nominal diameter	Lead	Number of threads	Ball diameter	best available tolerance class for right-hand thread shafts	best available tolerance class for left-hand thread shafts	External diameter	Thread minor diameter	Maximum length	Specific mass per meter shaft length	Cross-sectional area	Minimum axial moment of inertia	Polar moment of inertia
d_0	P_h		D_w			d_1	d_2	l_{max}	M	a	i	I_p
[mm]	[mm]		[mm]			[mm]	[mm]	[mm]	[kg/m]	[mm^2]	[mm^4]	[mm^4]
12	4	1	2.000	P3		11.60 h11	10.07	3000	0.76	9.63E+01	7.00E+02	1.48E+03
12	5	1	2.000	P3		11.50 h11	9.97	3000	0.76	9.64E+01	6.89E+02	1.48E+03
12	10	2	2.000	P3		11.50 h11	10.05	3000	0.75	9.61E+01	6.59E+02	1.48E+03
16	5	1	3.500	P3	T7	15.55 h11	12.88	6000	1.38	1.75E+02	2.22E+03	4.93E+03
16	5.08	1	3.500	P3		15.68 h12	12.86	6000	1.26	1.60E+02	2.03E+03	4.08E+03
16	10	2	3.000	P3		15.35 h11	12.89	6000	1.26	1.60E+02	1.69E+03	4.17E+03
20	5	1	3.500	P3	P3	19.50 h11	16.87	6000	2.21	2.82E+02	5.85E+03	1.27E+04
20	20	4	3.500	P3		19.50 h11	16.87	6000	2.03	2.59E+02	5.41E+03	1.08E+04
20	50	5	3.500	P3		19.10 h11	16.40	6000	2.05	2.62E+02	5.53E+03	1.11E+04
25	5	1	3.500	P3	T7	24.60 h11	21.90	6000	3.32	4.23E+02	1.42E+04	2.85E+04
25	10	2	3.500	P3		24.60 h11	21.92	6000	3.34	4.25E+02	1.27E+04	2.90E+04
25	20	4	3.500	P3		24.60 h11	21.92	6000	3.32	4.23E+02	1.44E+04	2.88E+04
25	25	4	3.500	P3		24.71 h12	21.92	6000	3.40	4.34E+02	1.51E+04	3.02E+04
25	25	5	3.500	P3		24.60 h11	21.92	6000	3.32	4.23E+02	1.44E+04	2.88E+04
25	50	5	3.500	P3		24.15 h11	21.47	6000	3.37	4.29E+02	1.48E+04	2.95E+04
32	5	1	3.500	P3	T7	31.50 h11	28.87	6000	5.90	7.52E+02	4.29E+04	9.01E+04
32	10	1	5.556	P3		31.67 h11	27.36	6000	5.54	7.05E+02	3.80E+04	7.92E+04
32	10	1	7.144	P3		32.74 h11	27.33	6000	5.57	7.10E+02	3.98E+04	8.03E+04
32	20	2	5.000	P3		31.70 h11	27.81	6000	5.67	7.22E+02	3.63E+04	8.38E+04
32	20	2	5.556	P3		31.67 h11	27.36	6000	5.53	7.04E+02	3.38E+04	7.99E+04
32	32	4	3.969	P3		31.30 h11	28.33	6000	5.74	7.31E+02	4.28E+04	8.56E+04
32	40	4	3.500	P3		30.90 h11	28.26	6000	5.63	7.17E+02	4.10E+04	8.21E+04
40	5	1	3.500	P3	T7	39.53 h11	36.90	6000	9.03	1.15E+03	1.05E+05	2.11E+05
40	10	1	7.144	P3	T7	39.56 h11	34.28	6000	8.43	1.07E+03	9.11E+04	1.83E+05
40	10	1	7.144	P3		39.50 h11	34.09	6000	8.36	1.06E+03	8.96E+04	1.81E+05
40	20	2	5.000	P3		39.70 h11	35.81	6000	9.05	1.15E+03	9.52E+04	2.13E+05
40	20	2	5.556	P3		40.00 h12	35.72	6000	8.87	1.13E+03	9.00E+04	2.05E+05
40	40	4	3.500	P3		38.95 h11	36.24	6000	9.02	1.15E+03	1.05E+05	2.11E+05
40	40	4	7.144	P3		39.81 h12	34.32	6000	8.37	1.07E+03	9.16E+04	1.83E+05
50	10	1	7.144	P3	T7	49.60 h11	44.11	6000	13.53	1.72E+03	2.35E+05	4.73E+05
50	20	2	6.350	P3		49.60 h11	44.87	6000	13.86	1.77E+03	2.22E+05	4.99E+05
50	20	2	7.144	P3		49.50 h11	43.99	6000	13.46	1.71E+03	2.05E+05	4.72E+05
63	10	1	7.144	P3		62.60 h11	57.15	6000	22.07	2.81E+03	6.25E+05	1.26E+06
63	20	2	7.144	P3		62.70 h11	57.16	6000	22.06	2.81E+03	5.70E+05	1.26E+06
80	10	1	7.144	T5		79.65 h12	74.20	6000	36.43	4.64E+03	1.71E+06	3.43E+06

Nut styles available from stock
(R = with right-hand thread
L = with left-hand thread)

FK	FH	FL	ZG	KGF-D	KGF-N	KGM-D	KGM-N
			R				R
							R
				R		R	
R		R	R	R	R	R	
				R		R	
R		R	R	R+L	R	R+L	R
	R				R		R
					R		R
R		R	R	R	R	R	R
	R		R	R		R	
				R		R	
	R						
				R		R	
				R		R	
R		R	R	R	R	R	R
R		R	R				
				R	R		R
				R			R
	R						
	R			R			
					R		R
R		R	R	R	R	R	R
R		R	R				
				R	R	R	
				R		R	
	R		R				
				R		R	
	R						
R		R	R	R	R	R	R
	R						
				R			R
R		R	R	R	R	R	R
	R			R		R	
R			R		R		R

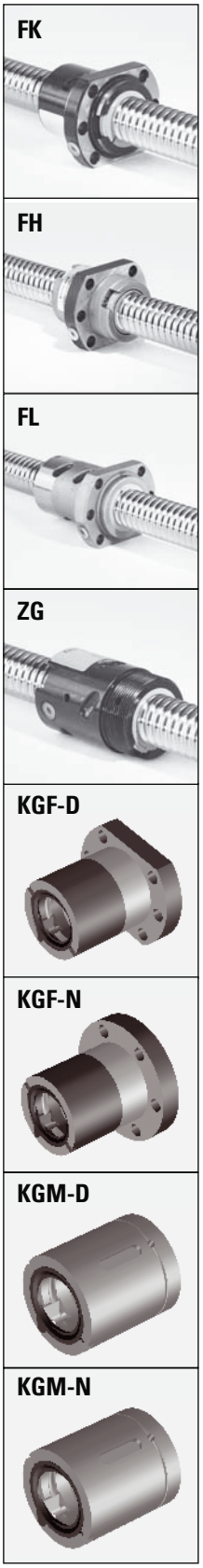

Nuts for rolled ball screw shafts

See fold-out cover page for dimensions, form and drilling pattern

Nominal diameter	Lead	Number of threads on the shaft	Ball diameter	FK style single nut									
				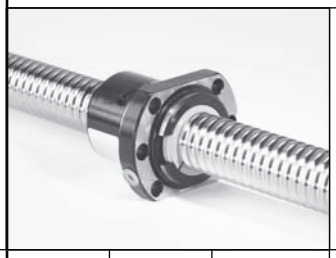									
d_0	P_h		D_w	D_1	D_4	D_5	D_6	L	L_m	L_1	L_3	L_7	
				g6			h13					h13	
[mm]	[mm]		[mm]	[mm]	[mm]	[mm]	[mm]	[mm]	[mm]	[mm]	[mm]	[mm]	
16	5	1	3.500	28	38	5.5	48	48.5	33	10	5.5	10	
20	5	1	3.500	36	47	6.6	58	48.5	33	10	5.5	10	
25	5	1	3.500	40	51	6.6	62	49	33	10	6	10	
32	5	1	3.500	50	65	9	80	57	39	10	6	12	
32	10	1	5.556	50	65	90	80	73	55	16	6	12	
40	5	1	3.500	63	78	9	93	66	45	10	7	14	
40	10	1	7.144	63	78	9	93	88.5	67.5	16	7	14	
50	10	1	7.144	75	93	11	110	92	69	13	7	16	
63	10	1	7.144	90	108	11	125	103.5	78.5	16	7	18	
80	10	1	7.144	105	125	13.5	145	121	92	16	9	20	

Nominal diameter	Lead	Number of threads on the shaft	Ball diameter	FH style single nut									
				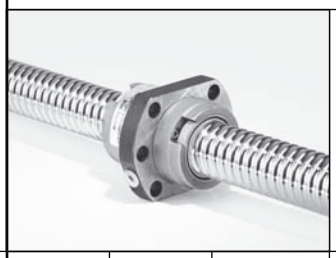									
d_0	P_h		D_w	D_1	D_4	D_5	D_6	L	L_m	L_1	L_3	L_7	
				g6			h13					h13	
[mm]	[mm]		[mm]	[mm]	[MM]	[mm]	[mm]	[mm]	[mm]	[mm]	[mm]	[mm]	
20	20	4	3.500	36	47	6.6	58	36	15	4	11	10	
25	10	2	3.500	40	51	6.6	62	51	30.85	20.7	10.15	10	
25	25	4	3.500	40	51	6.6	62	39	19	9	10	10	
32	20	2	5.556	56	71	9	86	63	52	25	19	12	
32	32	4	3.969	56	71	9	86	42	21	12	9	12	
40	20	2	5.556	63	78	9	93	83	49.5	25	19.5	14	
40	40	4	7.144	70	85	9	100	104	69	25	21	14	
50	20	2	6.350	75	93	11	110	85	47	16	22	16	
63	20	2	7.144	95	115	13.5	135	86	42	18	24	20	

[1] Dimension does not comply with DIN 69051; [2] Lubrication bore located anywhere on the circumference; [3] No wiper; [4] Round flange

					Nut form	Drilling pattern	Return system	Nominal axial backlash	Number of loaded turns	Modified dynamic rated load	Modified static rated load
	L_8	D_B	L_B	L_{10}						C_{am}	C_{a0m}
	h13										
	[mm]	[mm]	[mm]	[mm]				[mm]		[kN]	[kN]
	40	M6	5	8	S	1	EUS	0.041	3	9.5	10.9
	44	M6	5	8	S	1	EUS	0.041	3	11.5	15.5
	48	M6	5	8	S	1	EUS	0.041	3	13.1	20.2
	62	M6	6	8	S	1	EUS	0.041	4	19.3	36.3
	62		6	8	S	1	EUS	0.065	3	26.4	39
	70	M8X1	7	10	S	2	EUS	0.041	5	26.3	59.2
	70	M8X1	7	10	S	2	EUS	0.084	4	64.9	109
	85	M8X1	8	9	S	2	EUS	0.084	4	66.4	134.3
	95	M8X1	9	10	S	2	EUS	0.084	5	93.8	229.7
	110	M8X1	10	10	S	2	EUS	0.084	6	121.9	374.9

					Nut form	Drilling pattern	Return system	Nominal axial backlash	Number of loaded turns	Modified dynamic rated load	Modified static rated load
	L_8	D_B	L_B	L_{10}						C_{am}	C_{a0m}
	h13										
	[mm]	[mm]	[mm]	[mm]				[mm]		[kN]	[kN]
	44	M6	5	8	S	1	End cap	0.041	2.8	10.8	17.5
	48	M6	5	8	S	1	End cap	0.041	5.6	24.7	53.4
	48	M6	5	8	S	1	End cap	0.041	3.6	13.1	22.6
	68	M6	6	9	S	1	End cap	0.065	5.6	47.2	83.2
	68	M6	6	8	S	1	End cap	0.047	3	19.7	39
	70	M8X1	7	10	S	2	End cap	0.065	5.6	52.2	103.6
	77	M8X1	7	10	S	2	End cap	0.084	3.6	59.7	108.9
	85	M8X1	8	10	S	2	End cap	0.084	5.6	78.8	188.7
	100	M8X1	10	10	S	2	End cap	0.084	5.6	103.1	270.8

Nuts for rolled ball screw shafts

See fold-out cover page for dimensions, form and drilling pattern

FL style preloaded single nut

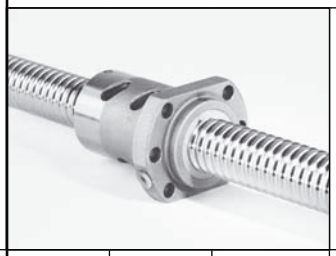

Nominal diameter	Lead	Number of threads on the shaft	Ball diameter	D_1	D_4	D_5	D_6	L	L_m	L_1	L_3	L_7
d_0	P_h		D_w	g6			h13					h13
[mm]	[mm]		[mm]	[mm]	[mm]	[mm]	[mm]	[mm]	[mm]	[mm]	[mm]	[mm]
16	5	1	3.500	28	38	5.5	48	55	39.5	10	5.5	10
20	5	1	3.500	36	47	6.6	58	68.5	53	10	5.5	10
25	5	1	3.500	40	51	6.6	62	69.5	53.5	10	6	10
32	5	1	3.500	50	65	9	80	83	65	10	6	12
32	10	1	5.556	50	65	9	80	105.5	87.5	16	6	12
40	5	1	3.500	63	78	9	93	97	76	10	7	14
40	10	1	7.144	63	78	9	93	142	121	16	7	14
50	10	1	7.144	75	93	11	110	144	121	16	7	16
63	10	1	7.144	90	108	11	125	166	141	16	7	18

ZG style single nut

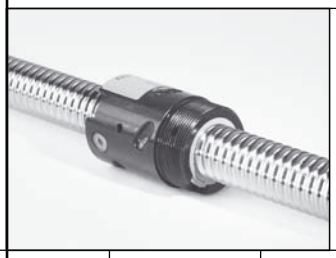

Nominal diameter	Lead	Number of threads on the shaft	Ball diameter	D_1	D_{11}	L	L_{11}	D_B	L_B	L_{10}	D_{13}	L_{13}
d_0	P_h		D_w	h12								
[mm]	[mm]		[mm]	[mm]	[mm]	[mm]	[mm]	[mm]	[mm]	[mm]	[mm]	[mm]
12	4	1	2.000	25	M20x1	34	10	M6x1	5	through	-	-
16	5	1	3.500	32	M30x1.5	57.5	16.5	M6x1	10.5	through	4	22
20	5	1	3.500	38	M35x1.5	57.5	16.5	M6x1	10.5	through	4	22
25	5	1	3.500	42	M40x1.5	63.5	17	M6x1	10.5	through	4	23
25	10	2	3.500	42	M40x1.5	61	17	M6x1	10	through	4	21
32	5	1	3.500	52	M48x1.5	65.5	19	M6x1	10.5	through	5	23
32	10	1	5.556	52	M48x1.5	85	19	M6x1	12	through	5	43
40	5	1	3.500	58	M56x1.5	67.5	19	M8x1	12	through	5	22.5
40	10	1	7.144	65	M60x2	105.5	27	M8x1	13	through	6	43
40	20	2	5.556	65	M60x2	83	27	M6x1	10	through	6	33
50	10	1	7.144	78	M72x2	118	29	M8x1	13	through	6	53
63	10	1	7.144	92	M85x2	118	29	M8x1	13	through	6	53
80	10	1	7.144	120	M110x2	126	34	M8x1	15.5	through	8	53

					Nut form	Drilling pattern	Return system	Nominal axial backlash	Number of loaded turns	Modified dynamic rated load	Modified static rated load
	L_8	D_B	L_B	L_{10}						C_{am}	C_{a0m}
	h13										
	[mm]	[mm]	[mm]	[mm]				[mm]		[kN]	[kN]
	40	M6	5	8	S	1	EUS	0.67	2+2	6.7	7.2
	44	M6	5	8	S	1	EUS	1.15	3+3	11.5	15.5
	48	M6	5	8	S	1	EUS	1.26	3+3	12.6	19.1
	62	M6	6	9	S	1	EUS	1.93	4+4	19.3	36.4
	62	M6	6	8	S	1	EUS	2.64	3+3	26.4	39
	70	M8X1	7	10	S	2	EUS	2.63	5+5	26.3	59.2
	70	M8X1	7	10	S	2	EUS	6.49	4+4	64.9	109
	85	M8X1	8	10	S	2	EUS	6.64	4+4	66.4	134.3
	95	M8X1	9	10	S	2	EUS	9.38	5+5	93.8	229.7

	Return system	Nominal axial backlash	Number of loaded turns	Modified dynamic rated load	Modified static rated load
				C_{am}	C_{a0m}
		[mm]		[kN]	[kN]
	EUS	0.024	3	3.5	4
	EUS	0.041	4	12.1	14.5
	EUS	0.041	4	14.8	20.7
	EUS	0.041	5	20.4	33.7
	MUS	0.041	6	19.9	31.8
	EUS	0.041	5	23.3	45.5
	EUS	0.065	4	33.8	52
	EUS	0.041	5	26.3	59.2
	EUS	0.084	5	78.6	136.2
	MUS	0.065	4	34.2	57.2
	EUS	0.084	6	97.8	213.2
	EUS	0.084	6	109.7	275.6
	EUS	0.084	6	121.9	375

[1] Dimension does not comply with DIN 69051
[2] Lubrication bore located anywhere on the circumference
[3] No wiper
[4] Round flange

Nuts for rolled ball screw shafts

See fold-out cover page for dimensions, form and drilling pattern

Nominal diameter	Lead	Number of threads on the shaft	Ball diameter	KGF-D style single nut									
				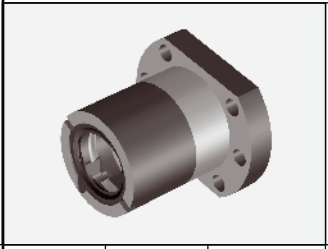									
d_0	P_h		D_w	D_1	D_4	D_5	D_6	L	L_m	L_1	L_3	L_7	
				g6			h13					h13	
[mm]	[mm]		[mm]	[mm]	[mm]	[mm]	[mm]	[mm]	[mm]	[mm]	[mm]	[mm]	
12	10	2	2.000	24	32	4.5	40	27.5	16	9.5	5	8	
16	5	1	3.500	28	38	5.5	48	42	32	10	0	10	
16	10	2	3.000	28	38	5.5	48	55	45	10	0	10	
20	5	1	3.500	36	47	6.6	58	42	32	10	0	10	
25	5	1	3.500	40	51	6.6	62	42	32	10	0	10	
25	10	2	3.500	40	51	6.6	62	55	45	16	0	10	
25	20	4	3.500	40	51	6.6	62	35	14.5	4	10.5	10	
25	25	5	3.500	40	51	6.6	62	35	17	9	8	10	
25	50	5	3.500	40	51	6.6	62	58	38	10	10	10	
32	5	1	3.500	50	65	9	80	55	43	10	0	12	
32	10	1	7.144	53 1	65	9	80	69	57	16	0	12	
32	20	2	5.000	53 1	65	9	80	80	68	16	0	12	
32	32	4	3.969	50	65	9	80	42	21	12	9	12	
40	5	1	3.500	63	78	9	93	57	43	10	0	14	
40	10	1	7.144	63	78	9	93	71	57	16	0	14	
40	20	2	5.000	63	78	9	93	80	66	16	0	14	
40	40	4	3.500	63	78	9	93	85	63.5	16	7.5	14	
50	10	1	7.144	75	93	11	110	95	79	16	0	16	
50	20	2	7.144	85 1	103 1	11	125	95	77	22	0	18	
63	10	1	7.144	90	108	11	125	97	79	16	0	18	
63	20	2	7.144	95	115	13.5	135	99	79	25	0	20	

[1] Dimension does not comply with DIN 69051; [2] Lubrication bore located anywhere on the circumference; [3] No wiper; [4] Round flange

					Nut form	Drilling pattern	Return system	Nominal axial backlash	Number of loaded turns	Modified dynamic rated load	Modified static rated load
L_8	D_B	L_B	L_{10}							C_{am}	C_{a0m}
h13											
[mm]	[mm]	[mm]	[mm]					[mm]		[kN]	[kN]
26	M5x0.8	4	6	S	3	End cap	0.024	4	4.9	8
40	M6x1	5	10	E	1	EUS	0.041	3	9.3	13.1
40	M6x1	5	10	E	1	Channel	0.041	6	15.4	26.5
44	M6x1	5	10	E 2	1	Channel	0.035	3	10.5	16.6
48	M6x1	5	10	E	1	EUS	0.041	3	12.3	22.5
48	M6x1	5	10	E	1	Channel	0.041	3	13.2	25.3
48	M6x1	5	8	S	1	End cap	0.041	4	13	23.3
- [4]	M6x1	5	8	S	1	End cap	0.041	5	16.7	32.2
48	M6x1	5	8	S	1	End cap	0.041	5	15.4	31.7
62	M6x1	6	10	E	1	EUS	0.041	5	21.5	49.3
62	M8x1	6	10	E	1	EUS	0.084	3	33.4	54.5
62	M6x1	6	10	E	1	Channel	0.059	4	29.7	59.8
62	M6x1	6	8	S	1	End cap	0.047	4	19.7	37.4
70	M6x1	7	10	E	2	EUS	0.041	5	23.8	63.1
70	M8x1	7	10	E	2	EUS	0.084	3	38	69.1
70	M8x1	7	10	E	2	Channel	0.059	4	33.3	76.1
- [4]	M8x1	7	10	S	2	End cap	0.041	8	35	101.9
85	M8x1	8	10	E	2	EUS	0.084	5	68.7	155.8
95	M8x1	9	10	E	2	Channel	0.084	4	60	136.3
95	M8x1	9	10	E	2	EUS	0.084	5	76	197
100	M8x1	10	10	E	2	Channel	0.084	4	78.4	171.3

Nuts for rolled ball screw shafts

See fold-out cover page for dimensions, form and drilling pattern

Nominal diameter	Lead	Number of threads on the shaft	Ball diameter	KGF-N style single nut								
				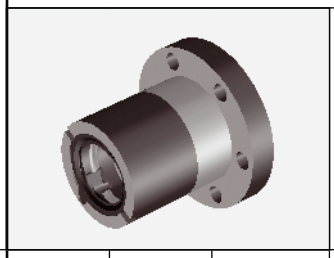								
d_0	P_h		D_w	D_1	D_4	D_5	D_6	L	L_m	L_1	L_3	L_7
				g6			h13					h13
[mm]	[mm]		[mm]	[mm]	[mm]	[mm]	[mm]	[mm]	[mm]	[mm]	[mm]	[mm]
16	5	1	3.500	28	38	5.5	48	44	32	8	0	12
20	5	1	3.500	32	45	7	55	44	32	8	0	12
20	20	4	3.500	35	50	7	62	30	12	4	8	10
20	50	5	3.500	35	50	7	62	56	37	10	9	10
25	5	1	3.500	38	50	7	62	46	32	8	0	14
32	5	1	3.500	45	58	7	70	49	43	10	0	16
32	10	1	7.144	53	68	7	80	73	57	10	0	16
32	40	4	3.500	53	68	7	80	45	21.5	14	7.5	16
40	5	1	3.500	53	68	7	80	59	43	10	0	16
40	10	1	7.144	63	78	9	95	73	57	10	0	16
50	10	1	7.144	72	90	11	110	97	79	10	0	18
63	10	1	7.144	85	105	11	125	99	79	10	0	20
80	10	1	7.144	105	125	14	145	101	79	10	0	22

[1] Dimension does not comply with DIN 69051; [2] Lubrication bore located anywhere on the circumference; [3] No wiper; [4] Round flange

					Nut form	Drilling pattern	Return system	Nominal axial backlash	Number of loaded turns	Modified dynamic rated load	Modified static rated load
L_8	D_B	L_B	L_{10}							C_{am}	C_{a0m}
h13											
[mm]	[mm]	[mm]	[mm]					[mm]		[kN]	[kN]
- [4]	M6x1	6	8	E	4	EUS	0.041	3	9.3	13.1
- [4]	M6x1	6	8	E	4	EUS	0.041	3	10.5	16.6
- [4]	M6x1	5	8	S	4	End cap	0.041	4	11.6	18.4
- [4]	M6x1	5	8	S	4	End cap	0.041	5	13	24.6
- [4]	M6x1	7	8	E	4	EUS	0.041	3	12.3	22.5
- [4]	M6x1	8	8	E	4	EUS	0.041	5	21.5	49.3
- [4]	M8x1	8	8	E	4	EUS	0.084	3	33.4	54.5
- [4]	M6x1	8	10	S	4	End cap	0.041	4	14.9	32.4
- [4]	M6x1	8	8	E	4	EUS	0.041	5	23.8	63.1
- [4]	M8x1	8	8	E	4	EUS	0.084	3	38	69.1
- [4]	M8x1	9	8	E	4	EUS	0.084	5	68.7	155.8
- [4]	M8x1	10	8	E	4	EUS	0.084	5	76	197
- [4]	M8x1	11	8	E	4	EUS	0.084	5	86.25	262.41

Nuts for rolled ball screw shafts

See fold-out cover page for dimensions, form and drilling pattern

Nominal diameter	Lead	Number of threads on the shaft	Ball diameter	KGM-D style single nut								Nut form	Return system	Nominal axial backlash	Number of loaded turns	Modified dynamic rated load	Modified static rated load
				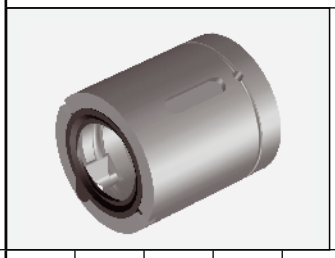													
d_0	P_h		D_w	D_1	L	L_3	D_B	L_B	L_9	L_{12}	W x D					C_{am}	C_{a0m}
				g6							B:P9						
[mm]	[mm]		[mm]	[mm]	[mm]	[mm]	[mm]	[mm]	[mm]	[mm]	[mm]			[mm]		[kN]	[kN]
12	10	2	2.000	24	27.5	5	2	7	8.75	10	3x1.8	S	End cap	0.024	4	4.9	8
16	5	1	3.500	28	34	-	3	7	7	20	5x2	E	EUS	0.041	3	9.3	13.1
16	10	2	3.000	28	50	-	3	7	15	20	5x2	E	Channel	0.035	6	15.4	26.5
20	5	1	3.500	36	34	-	3	7	7	20	5x2	E 2	Channel	0.041	3	10.5	16.6
25	5	1	3.500	40	34	-	3	7	7	20	5x2	E	EUS	0.041	3	12.3	22.5
25	10	2	3.500	40	45	-	3	7.5	12.5	20	5x2	E	Channel	0.041	3	13.2	25.3
25	20	4	3.500	40	35	10.5	1.5	14	11.5	12	5x3	S	End cap	0.041	4	13	23.3
25	25	5	3.500	40	35	8	1.5	11.5	11	13	5x3	S	End cap	0.041	5	16.7	32.2
25	50	5	3.500	40	58	10	1.5	17	19	20	5x3	S	End cap	0.041	5	15.4	31.7
32	5	1	3.500	50	45	-	3	7.5	8	30	6x2.5	E	EUS	0.041	5	21.5	49.3
40	5	1	3.500	63	45	-	3	7.5	8	30	6x2.5	E	EUS	0.041	5	23.8	63.1
40	10	1	7.144	63	60	-	4	10	15	30	6x2.5	E	EUS	0.084	3	38	69.1
40	20	2	5.000	63	70	-	3	7.5	20	30	6x2.5	E	Channel	0.059	4	33.3	76.1
40	40	4	3.500	63	85	7.5	1.5	15	27.5	30	6x3.5	S	End cap	0.041	8	35	101.9
50	10	1	7.144	75	82	-	4	11	23	36	6x2.5	E	EUS	0.084	5	82	153
63	10	1	7.144	90	82	-	4	11	23	36	6x2.5	E	EUS	0.084	5	90	200
63	20	2	7.144	95	82	-	4	10	23	36	6x2.5	E	Channel	0.084	4	78.4	171.3

[1] Dimension does not comply with DIN 69051; [2] Lubrication bore located anywhere on the circumference; [3] No wiper; [4] Round flange

KGM-N style single nut

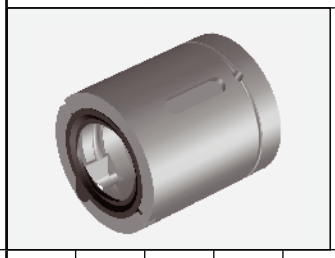

Nominal diameter	Lead	Number of threads on the shaft	Ball diameter									Nut form	Return system	Nominal axial backlash	Number of loaded turns	Modified dynamic rated load	Modified static rated load
d_0	P_h		D_w	D_1	L	L_3	D_B	L_B	L_9	L_{12}	W x D					C_{am}	C_{a0m}
				g6							B:P9						
[mm]	[mm]		[mm]	[mm]	[mm]	[mm]	[mm]	[mm]	[mm]	[mm]	[mm]			[mm]		[kN]	[kN]
12	4	1	2.000	20	24	-	0	0	5	14	3x1.8	E [3]	Channel	0.024	3	4.9	6.6
12	5	1	2.000	20	24	-	0	0	5	14	3x1.8	E [3]	Channel	0.024	3	4.4	6.8
20	5	1	3.500	32	34	-	3	7	7	20	5x2	E	EUS	0.041	3	10.5	16.6
20	20	4	3.500	35	30	8	1.5	11.5	9	12	5x3	S	End cap	0.041	4	11.6	18.4
20	50	5	3.500	35	56	9	1.5	16	18	20	5x3	S	End cap	0.041	5	13	24.6
25	5	1	3.500	38	34	-	3	7	7	20	5x2	E	EUS	0.041	3	12.3	22.5
32	5	1	3.500	45	45	-	3	7.5	8	30	6x2.5	E	EUS	0.041	5	21.5	49.3
32	10	1	7.144	53	60	-	4	10	15	30	6x2.5	E	EUS	0.084	3	33.4	54.5
32	20	2	5.000	53	70	-	3	7.5	20	30	6x2.5	E	Channel	0.059	4	29.7	59.8
32	40	4	3.500	53	45	7.5	1.5	13	10	25	6x4	S	End cap	0.041	4	14.9	32.4
40	5	1	3.500	53	45	-	3	7.5	8	30	6x2.5	E	EUS	0.041	5	23.8	63.1
50	10	1	7.144	72	82	-	4	11	23	36	6x2.5	E	EUS	0.084	5	68.7	155.8
50	20	2	7.144	85	82	-	4	10	23	36	6x2.5	E	Channel	0.084	4	60	136.3
63	10	1	7.144	85	82	-	4	11	23	36	6x2.5	E	EUS	0.084	5	76	197
80	10	1	7.144	105	82	-	4	11	23	36	8x3	E	EUS	0.084	5	86.3	262.4

[1] Dimension does not comply with DIN 69051; [2] Lubrication bore located anywhere on the circumference; [3] No wiper; [4] Round flange

General information regarding peeled/ground ball screws

Method of manufacture

■ **Peeled (standard)**

Peeled ball screw shafts are produced using cutting plates in special materials. In this process, the raceway is cut into the previously hardened raw material in a single pass, or multiple passes for large balls.

■ **Ground**

Depending on the ball size, the raceway of ground ball screw shafts is either ground directly into the solid blank, or the blank is first peeled and then ground.

Tolerance classes

■ **Peeled (standard)**

Peeled ball screw shafts are currently available in classes P3, P4 and P5 and also T5 and T7

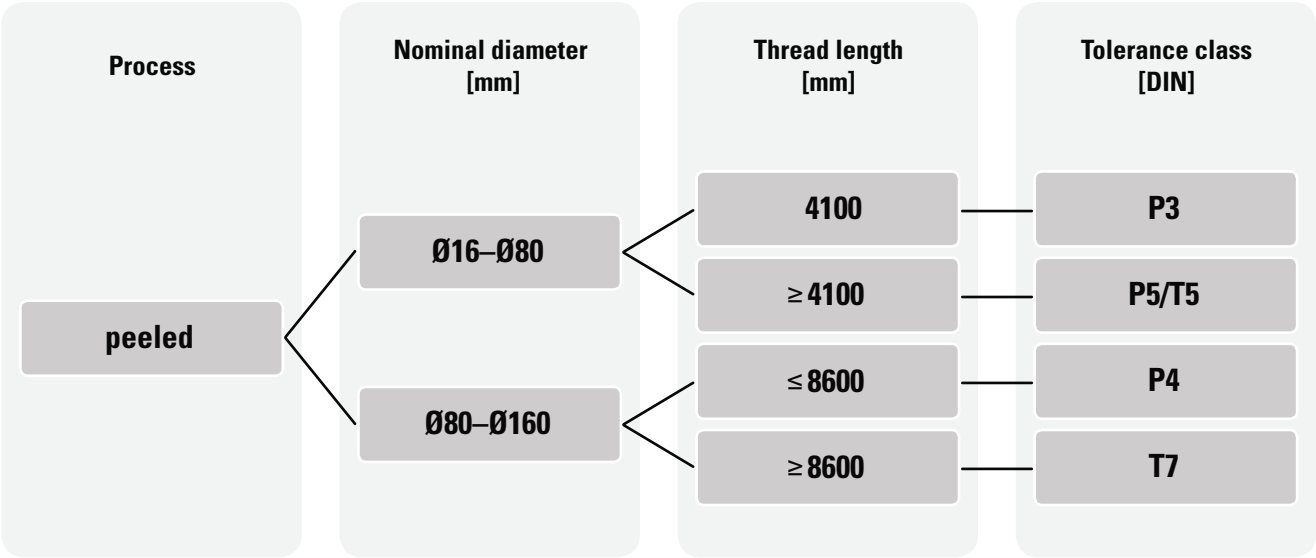

■ **Ground**

Ground shafts are available on request.

Thomson Neff peeled shafts are setting new standards:

- Higher or at least identical surface quality of the raceway compared with ground lead screws
- Better running in behavior, i.e. the ball screw nut's preloading is maintained for longer
- Greater profile accuracy thanks to geometrically defined cutting of the cutting plates
- Greater service life thanks to the points listed above

Technical data

Thread:	Gothic thread profile
Diameter:	16–160mm (other sizes on request)
Number of starts:	1–2
Lead:	As customer requirement
Thread direction:	Clockwise, counter-clockwise, right-hand/left-hand shaft
End journal:	As customer requirement

Standard range of peeled recirculating ball screws with single return Ø16-Ø63

Nominal diameter	Nominal lead	Ball diameter	Fit diameter	Nut length [mm] * L SEM or VEM-4 SEM single nut with backlash VEM-4 anti-backlash or preloaded single nut								
d_0	P_{h0}	D_w	D_1	Number of loaded turns								
[mm]	[mm]	[mm]	[mm]	2	3	4	5	6	7	8	9	10
16	5	3.500	28	42.50	48.50	55.00	59.00	64.50	-	-	-	-
20	5	3.500	36	42.50	48.50	54.00	59.00	68.50	70.00	76.00	-	-
20	10	3.969	36	58.00	69.50	-	-	-	-	-	-	-
25	5	3.500	40	43.50	49.50	55.00	60.00	69.50	71.00	77.00	83.00	88.50
25	10	3.969	40	59.00	70.50	83.50	92.00	102.00	-	-	-	-
32	5	3.500	50	45.50	51.50	57.00	62.00	67.50	73.00	83.00	85.00	90.50
32	10	5.556	50	61.00	72.50	85.50	94.00	105.50	116.00	127.50	-	-
32	15	5.556	56	76.00	93.50	110.00	128.50	147.50	-	-	-	-
40	5	3.500	63	49.50	55.50	61.00	66.00	71.50	77.00	83.00	89.00	97.00
40	10	6.350	63	67.00	79.00	89.50	100.00	110.50	122.00	142.00	145.50	157.00
40	10	7.144	63	67.00	79.00	89.50	100.00	110.50	122.00	142.00	145.50	157.00
40	15	6.350	63	78.50	96.00	112.50	128.00	143.50	161.00	178.50	-	-
40	20	6.350	63	93.00	116.00	136.00	159.00	179.50	-	-	-	-
50	5	3.500	75	51.50	57.50	63.00	68.00	73.50	79.00	85.00	91.00	96.50
50	10	7.144	75	69.00	81.00	91.50	102.00	112.50	124.00	144.00	147.50	159.00
50	20	7.938	75	96.50	120.00	141.50	162.50	186.50	206.50	230.00	-	-
63	5	3.500	90	53.50	59.50	65.00	70.00	75.50	81.00	87.00	91.00	97.00
63	10	7.144	90	71.00	83.00	93.50	104.00	114.50	126.00	138.00	146.00	166.00
63	15	7.938	95	92.00	109.50	126.00	141.50	157.00	174.50	192.00	-	-
63	20	9.525	95	106.50	130.00	151.50	172.50	209.50	216.50	240.00	-	-
63	25	9.525	95	118.50	148.00	175.00	201.00	-	-	-	-	-

Standard * Nut lengths may vary

Nut length [mm] * **L** VEM-2 VEM-2 preloaded single nut							Nut length [mm] * **L** VDM VDM Preloaded double nut						
Number of loaded turns							Number of loaded turns						
2+2	3+3	4+4	5+5	6+6	7+7	8+8	2	3	4	5	6	7	8
55.00	68.50	-	-	-	-	-	-	-	-	-	-	-	-
53.50	68.50	80.00	-	-	-	-	-	-	-	-	-	-	-
-	-	-	-	-	-	-	-	-	-	-	-	-	-
58.50	69.50	81.00	91.00	-	-	-	-	-	-	-	-	-	-
83.50	110.50	-	-	-	-	-	-	-	-	-	-	-	-
60.50	71.50	83.00	93.00	103.00	115.00	-	75.00	87.00	97.50	108.00	118.50	130.00	142.00
85.50	105.50	129.00	-	-	-	-	105.50	129.00	150.50	171.50	192.00	215.50	239.00
121.00	153.50	-	-	-	-	-	133.50	168.50	201.00	232.50	263.50	-	-
64.50	75.50	87.00	97.00	111.00	119.00	130.50	79.00	91.00	101.50	112.00	122.50	134.00	146.00
97.00	119.00	142.00	162.00	-	-	-	114.00	137.50	159.00	180.00	201.00	224.00	247.50
97.00	119.00	142.00	162.00	-	-	-	114.00	137.50	159.00	180.00	201.00	224.00	247.50
123.50	156.00	191.00	-	-	-	-	136.50	171.50	204.00	235.50	266.50	301.50	336.50
136.00	196.00	-	-	-	-	-	165.00	212.00	255.00	297.00	338.50	-	-
66.50	77.50	89.00	99.00	109.00	121.00	132.50	81.00	93.00	103.50	114.00	124.50	136.00	148.00
99.00	120.50	144.00	164.00	184.00	-	-	116.00	139.50	161.00	182.00	203.00	226.00	249.50
156.50	186.50	233.50	-	-	-	-	170.50	217.00	260.50	302.50	343.50	390.50	437.00
68.50	79.50	91.00	101.00	111.00	123.00	-	89.00	101.00	111.50	122.00	132.50	144.00	156.00
101.00	123.00	146.00	166.00	186.00	-	-	124.00	147.50	169.00	190.00	211.00	234.00	257.50
137.00	169.50	199.50	-	-	-	-	159.50	194.50	227.00	258.50	289.50	324.50	359.50
166.00	209.50	259.50	-	-	-	-	188.50	235.00	278.50	320.50	361.50	408.50	455.00
193.50	-	-	-	-	-	-	212.50	271.00	325.00	377.50	-	-	-

Standard * Nut lengths may vary

Standard range of peeled recirculating ball screws with single return Ø16-Ø63

Nominal diameter	Nominal lead	Ball diameter	Fit diameter	Modified dynamic rated load [kN] C_{am}								
d_0	P_{h0}	D_w	D_1	Number of loaded turns								
[mm]	[mm]	[mm]	[mm]	2	3	4	5	6	7	8	9	10
16	5	3.500	28	6.70	9.40	12.10	14.70	17.20	-	-	-	-
20	5	3.500	36	8.10	11.50	14.80	17.90	20.90	23.90	26.80	-	-
20	10	3.969	36	8.70	12.40	-	-	-	-	-	-	-
25	5	3.500	40	9.60	13.60	17.40	21.10	24.70	28.20	31.60	35.00	38.30
25	10	3.969	40	10.40	14.80	19.00	23.00	26.90	-	-	-	-
32	5	3.500	50	10.90	15.50	19.80	24.00	28.10	32.10	36.00	39.80	43.60
32	10	5.556	50	18.60	26.40	33.80	40.90	47.90	54.70	61.30	-	-
32	15	5.556	56	17.60	24.90	31.90	38.70	45.20	-	-	-	-
40	5	3.500	63	12.20	17.30	22.10	26.80	31.40	35.80	40.20	44.50	48.70
40	10	6.350	63	29.70	42.10	53.90	65.30	76.40	87.20	97.80	108.20	118.50
40	10	7.144	63	35.70	50.60	64.90	78.60	91.90	104.90	117.70	130.30	142.60
40	15	6.350	63	29.50	41.90	53.60	65.00	76.00	86.80	97.30	-	-
40	20	6.350	63	28.00	39.70	50.90	61.60	72.10	-	-	-	-
50	5	3.500	75	12.70	18.00	23.00	27.90	32.60	37.20	41.80	46.20	50.60
50	10	7.144	75	38.00	53.90	69.00	83.60	97.80	111.70	125.30	138.60	151.80
50	20	7.938	75	41.20	58.40	74.80	90.60	106.00	121.00	135.80	-	-
63	5	3.500	90	14.10	20.00	25.60	31.00	36.30	41.50	46.50	51.50	56.40
63	10	7.144	90	43.90	62.20	79.60	96.50	112.90	128.90	144.50	159.90	175.10
63	15	7.938	95	49.60	70.30	90.00	109.00	127.50	145.60	163.30	-	-
63	20	9.525	95	61.90	87.70	112.30	136.00	159.10	181.70	203.80	-	-
63	25	9.525	95	59.20	83.90	107.40	130.20	-	-	-	-	-

Standard

Modified static rated load [kN] C_{0am}								
Number of loaded turns								
2	3	4	5	6	7	8	9	10
7.20	10.90	14.50	18.10	21.70	-	-	-	-
10.30	15.50	20.70	25.80	31.00	36.20	41.30	-	-
10.30	15.40	-	-	-	-	-	-	-
14.20	21.30	28.40	35.50	42.70	49.80	56.90	64.00	71.10
14.30	21.40	28.50	35.60	42.80	-	-	-	-
18.90	28.40	37.90	47.30	56.80	66.30	75.70	85.20	94.70
26.00	39.00	52.00	65.00	78.00	91.00	104.00	-	-
24.00	36.00	48.00	60.00	72.00	-	-	-	-
24.40	36.70	48.90	61.10	73.30	85.60	97.80	110.00	122.20
46.50	69.70	93.00	116.20	139.40	162.70	185.90	209.20	232.40
54.50	81.80	109.00	136.30	163.50	190.80	218.00	245.30	272.50
46.30	69.50	92.60	115.80	138.90	162.10	185.20	-	-
43.00	64.50	86.00	107.50	129.00	-	-	-	-
31.50	47.30	63.10	78.80	94.60	110.30	126.10	141.90	157.60
71.10	106.60	142.20	177.70	213.20	248.80	284.30	319.80	355.40
72.30	108.40	144.60	180.70	216.90	253.00	289.20	-	-
41.00	61.50	82.00	102.40	122.90	143.40	163.90	184.40	204.90
95.90	143.80	191.70	239.70	287.60	335.50	383.50	431.40	479.30
102.90	154.40	205.90	257.30	308.80	360.30	411.70	-	-
118.60	177.90	237.30	296.60	355.90	415.20	474.50	-	-
111.40	167.00	222.70	278.40	-	-	-	-	-

Standard

Standard range of peeled recirculating ball screws with single return Ø80-Ø160

Nominal diameter	Nominal lead	Ball diameter	Fit diameter	Nut length [mm] * L SEM or VEM-4 SEM single nut with backlash VEM-4 anti-backlash or preloaded single nut								
d_0	P_{h0}	D_w	D_1	Number of loaded turns								
[mm]	[mm]	[mm]	[mm]	2	3	4	5	6	7	8	9	10
80	10	7.144	105	77.00	89.00	99.50	110.00	120.50	132.00	144.00	155.50	167.00
80	20	12.700	125	115.50	139.00	160.50	181.50	202.50	225.50	265.50	272.50	295.50
80	25	12.700	125	127.50	157.00	184.00	210.00	236.00	265.00	-	-	-
80	30	12.700	125	138.50	173.50	206.00	237.50	268.50	-	-	-	-
100	10	7.144	125	81.00	93.00	103.50	114.00	124.50	136.00	148.00	159.50	171.00
100	20	14.288	150	124.50	148.00	169.50	190.50	211.50	234.50	258.00	-	-
100	25	14.288	150	137.50	166.50	194.00	220.00	246.00	275.00	304.00	-	-
100	30	12.700	150	145.50	180.50	213.00	244.50	275.50	310.50	345.50	-	-
100	40	12.700	150	172.50	219.50	262.50	304.50	346.00	-	-	-	-
125	10	7.144	150	84.00	96.00	106.50	117.00	127.50	139.00	151.00	159.00	170.50
125	20	14.288	170	124.50	148.00	169.50	190.50	211.50	234.50	258.00	274.50	297.00
125	25	19.050	200	143.00	172.50	199.50	225.50	251.50	280.50	310.00	339.00	-
125	30	19.050	200	155.50	190.50	223.00	254.50	285.50	320.50	-	-	-
125	40	19.050	200	178.50	225.50	268.50	310.50	352.00	-	-	-	-
160	20	14.288	210	134.50	158.00	179.50	200.50	221.50	244.50	268.00	291.50	314.50
160	25	19.050	260	153.00	182.50	209.50	235.50	261.50	290.50	320.00	349.00	-
160	30	19.050	260	165.50	200.50	233.00	264.50	295.50	330.50	365.50	-	-

Standard * Nut lengths may vary

Nut length [mm] * **L** VEM-2 VEM-2 preloaded single nut							Nut length [mm] * **L** VDM VDM Preloaded double nut						
Number of loaded turns							Number of loaded turns						
2+2	3+3	4+4	5+5	6+6	7+7	8+8	2	3	4	5	6	7	8
107.00	129.00	152.00	172.00	192.00	215.50	239.00	131.00	154.50	176.00	197.00	218.00	241.00	264.50
175.50	219.00	265.50	299.00	-	-	-	201.50	248.50	291.50	333.50	375.00	421.50	468.50
202.50	257.00	-	-	-	-	-	225.50	284.00	338.00	390.50	442.00	500.50	-
228.50	293.50	-	-	-	-	-	247.50	317.50	382.50	445.50	507.50	-	-
111.00	133.00	156.00	184.00	196.00	219.50	243.00	150.00	173.50	195.00	216.00	237.00	260.00	283.50
-	-	-	-	-	-	-	217.50	264.50	307.50	349.50	391.00	437.50	484.50
-	-	-	-	-	-	-	243.00	301.50	355.50	408.00	459.50	518.00	576.50
230.50	300.50	370.50	-	-	-	-	259.50	329.50	394.50	457.50	519.50	589.50	659.50
286.00	379.50	-	-	-	-	-	313.50	407.00	493.50	577.50	660.50	-	-
112.50	136.00	159.00	179.00	199.00	222.50	-	153.00	176.50	198.00	219.00	240.00	263.00	286.50
-	-	-	-	-	-	-	217.50	264.50	307.50	349.50	391.00	437.50	484.50
-	-	-	-	-	-	-	254.50	313.00	367.00	419.50	471.50	529.50	588.00
-	-	-	-	-	-	-	279.50	349.50	414.50	477.50	539.50	609.50	-
-	-	-	-	-	-	-	325.50	419.00	505.50	589.50	672.50	-	-
-	-	-	-	-	-	-	227.50	274.50	317.50	359.50	401.00	447.50	494.50
-	-	-	-	-	-	-	264.50	323.00	377.00	429.50	481.50	539.50	598.00
-	-	-	-	-	-	-	289.50	359.50	424.50	487.50	549.50	619.50	689.50

Standard * Nut lengths may vary

Standard range of peeled recirculating ball screws with single return Ø80-Ø160

Nominal diameter	Nominal lead	Ball diameter	Fit diameter	Modified dynamic rated load [kN] C_{am}								
d_0	P_{h0}	D_w	D_1	Number of loaded turns								
[mm]	[mm]	[mm]	[mm]	2	3	4	5	6	7	8	9	10
80	10	7.144	105	48.40	68.60	87.90	106.40	124.50	142.20	159.50	176.50	193.20
80	20	12.700	125	97.20	137.70	176.40	213.70	250.00	285.40	320.20	354.30	387.90
80	25	12.700	125	97.00	137.40	176.00	213.30	249.50	284.80	-	-	-
80	30	12.700	125	96.70	137.10	175.60	212.70	248.80	-	-	-	-
100	10	7.144	125	51.10	72.40	92.70	112.30	131.30	149.90	168.20	186.10	203.80
100	20	14.288	150	127.40	180.60	231.30	280.20	327.80	374.20	419.80	-	-
100	25	14.288	150	122.70	174.00	222.80	269.90	315.70	360.50	404.40	-	-
100	30	12.700	150	103.80	147.10	188.40	228.20	267.00	304.80	341.90	-	-
100	40	12.700	150	103.40	146.50	187.60	227.30	265.90	-	-	-	-
125	10	7.144	150	56.50	80.00	102.50	124.20	145.30	165.90	186.10	205.90	225.40
125	20	14.288	170	142.10	201.40	257.90	312.50	365.50	417.30	468.10	518.00	567.10
125	25	19.050	200	201.00	284.80	364.80	442.00	517.00	590.30	662.10	732.70	-
125	30	19.050	200	200.80	284.50	364.40	441.50	516.40	589.60	-	-	-
125	40	19.050	200	200.20	283.80	363.40	440.30	515.00	-	-	-	-
160	20	14.288	210	162.20	229.90	294.50	356.80	417.30	476.50	534.50	591.40	647.50
160	25	19.050	260	233.90	331.50	424.60	514.40	601.70	687.00	770.60	852.70	-
160	30	19.050	260	233.80	331.30	424.30	514.00	601.30	686.50	770.10	-	-

Standard

Modified static rated load [kN] C_{0am}								
Number of loaded turns								
2	3	4	5	6	7	8	9	10
129.00	193.50	258.00	322.50	387.00	451.50	516.00	580.50	645.00
198.40	297.50	396.70	495.90	595.10	694.30	793.40	892.60	991.80
198.00	297.10	396.10	495.10	594.10	693.10	-	-	-
197.60	296.50	395.30	494.10	592.90	-	-	-	-
162.30	243.50	324.70	405.80	487.00	568.20	649.30	730.50	811.70
300.20	450.30	600.40	750.50	900.60	1050.70	1200.80	-	-
284.10	426.10	568.20	710.20	852.30	994.30	1136.40	-	-
250.50	375.70	501.00	626.20	751.50	876.70	1002.00	-	-
249.70	374.50	499.40	624.20	749.00	-	-	-	-
208.10	312.10	416.20	520.20	624.20	728.30	832.30	936.40	1040.40
383.40	575.10	766.80	958.50	1150.20	1341.90	1533.60	1725.30	1917.00
322.70	484.10	645.40	806.80	968.10	1129.50	1290.80	1452.20	-
322.40	483.70	644.90	806.10	967.30	1128.60	-	-	-
321.80	482.70	643.50	804.40	965.30	-	-	-	-
516.10	774.10	1032.10	1290.20	1548.20	1806.20	2064.20	2322.30	2580.30
442.20	663.30	884.40	1105.60	1326.70	1547.80	1768.90	1990.00	-
442.00	663.00	884.00	1105.00	1326.00	1547.00	1768.00	-	-

Standard

Nut dimensions with DIN flange for peeled recirculating ball screws

Nominal diameter		Lead					Lubrication nipple						Drilling pattern	Fastening screws	Maximum operating force for screws F_{bmax}		Tightening torque for screws T_a
d_0		P_h	D_1	D_4	D_5	D_6	D_B	L_1	L_3	L_7	L_8	L_{10}			Dyn.	Stat.	
[mm]		[mm]	[mm]	[mm]	[mm]	[mm]	[-]	[mm]	[mm]	[mm]	[mm]	[mm]	[-]	[-]	[kN]	[kN]	[Nm]
16	≤	5	28	38	5.5	48	M6	10	5.5	10	40	8	1	M5	12	40	6
16	>	5	32	42	5.5	52	M6	10	5.5	10	40	8	1	M5	12	40	6
20	>	1	36	47	6.6	58	M6	10	5.5	10	44	8	1	M6	16	63	10
25	≤	5	40	51	6.6	62	M6	10	6	10	48	8	1	M6	16	63	10
25	>	5	40	51	6.6	62	M6	10	6	10	48	8	1	M6	16	63	10
32	≤	10	50	65	9	80	M6	10	6	12	62	8	1	M8	32	100	25
32	>	10	56	71	9	86	M6	20	6	14	65	8	1	M8	32	100	25
40	<	10	63	78	9	93	M8x1	10	7	14	70	10	2	M8	40	150	25
40	≥	10	63	78	9	93	M8x1	20	7	14	70	10	2	M8	40	150	25
40•	>	10	70	85	9	100	M8x1	25	7	14	75	10	2	M8	40	150	25
50	≤	10	75	93	11	110	M8x1	10	7	16	85	10	2	M10	80	225	49
50	>	10	75	93	11	110	M8x1	20	7	16	85	10	2	M10	80	225	49
50•	>	10	82	100	11	118	M8x1	25	7	16	92	10	2	M10	80	225	49
63	≤	10	90	108	11	125	M8x1	10	7	18	95	10	2	M10	80	225	49
63	>	10	95	115	13.5	135	M8x1	25	9	20	100	10	2	M12	125	320	86
63•	>	10	105	125	13.5	145	M8x1	25	9	20	110	10	2	M12	125	320	86
80	≤	10	105	125	13.5	145	M8x1	12	9	20	110	10	2	M12	125	320	86
80	>	10	125	145	13.5	165	M8x1	25	9	25	130	10	2	M12	125	320	86
80•	>	10	135	155	13.5	175	M8x1	25	9	25	140	10	2	M12	125	320	86
100	≤	10	125	145	13.5	165	M8x1	10	10	22	130	10	2	M12	125	320	86
100	>	10	150	176	17.5	202	M8x1	25	10	30	155	10	2	M16	250	630	210
100•	>	10	160	186	17.5	212	M8x1	40	10	30	165	10	2	M16	250	630	210
125	≤	10	150	176	17.5	202	M8x1	10	10	25	155	10	2	M16	250	630	210
125	>	10	170	196	17.5	222	M8x1	25	10	30	175	10	2	M16	250	630	210
125•	>	10	200	233	22	265	M8x1	40	10	30	205	10	2	M20	400	1000	410
160	≤	10	185	212	17.5	240	M8x1	10	10	30	190	10	2	M16	250	630	210
160	>	10	210	243	22	275	M8x1	25	10	40	215	10	2	M20	400	1000	410
160•	>	10	260	300	22	340	M8x1	40	10	40	265	10	2	M20	400	1000	410

• Secondary size

[1] Basis for screw calculation:
Cheese head screws complying with EN ISO 4762, property class 8.8, maximum operating forces Fb_{max} at 90% exploitation of the yield point, safety factor v=0.8 additionally taken into consideration, friction factor μ_{ges}= 0.14 for untreated, oiled screws.
Tighten using torque wrench to torque T_a. Operating forces in excess of this shall be absorbed by the use of screws complying with EN ISO 4762 in higher property classes

Standard range for peeled heavy duty recirculating ball screws

Only available with single nuts with backlash (SEM)

d_0	P_h	D_w	D_1	i	L	C_{am}	C_{0am}	D_4	D_5	D_6	D_B	L_1	L_3	L_7	L_8	L_{10}
[mm]	[mm]	[mm]	[mm]	[each]	[mm]	[kN]	[kN]	[mm]	[mm]	[mm]	[mm]	[mm]	[mm]	[mm]	[mm]	[mm]
40	12	7.938	75	8	165.0	220	434	93	11	110	M8x1	25	7	16	85	10
50	20	9.525	90	5.8	152.0	259.4	603.4	108	11	125	M8x1	25	7	20	95	10
50	25	9.525	90	5.8	177.5	258	600.9	108	11	125	M8x1	25	7	20	95	10
63	20	12.700	105	8	249.0	478.6	1108.7	125	13.5	145	M8x1	25	9	25	110	10
63	25	12.700	120	5.8	185.5	419.8	1002.2	145	13.5	165	M8x1	30	9	25	130	10
80	20	14.288	135	9	280.5	690.2	1860.8	155	13.5	175	M8x1	30	9	30	140	10
80	25	14.288	135	7	273.0	554.8	1445	155	13.5	175	M8x1	30	9	30	140	10
100	20	14.288	160	8	252.0	709.3	2276.5	186	17.5	212	M8x1	40	10	30	165	10
100	25	19.050	160	8	310.0	968.4	1843.8	189	17.5	212	M8x1	40	10	30	165	10
125	20	14.288	200	11	338.0	1040.1	3997.8	233	22	265	M8x1	40	10	40	205	10
125	25	19.050	200	9	349.0	1238	2753.2	233	22	265	M8x1	40	10	40	205	10
125	30	19.050	200	7	330.5	996.3	2139.6	233	22	265	M8x1	40	10	40	205	10
160	20	14.288	260	12	357.0	1279.9	5870.3	300	22	340	M8x1	40	10	45	265	10
160	25	19.050	260	9	354.0	1440.8	3772.8	300	22	340	M8x1	40	10	45	265	10
160	30	19.050	260	8	370.5	1301.2	3351.9	300	22	340	M8x1	40	10	45	265	10

Dimensions do not comply with DIN

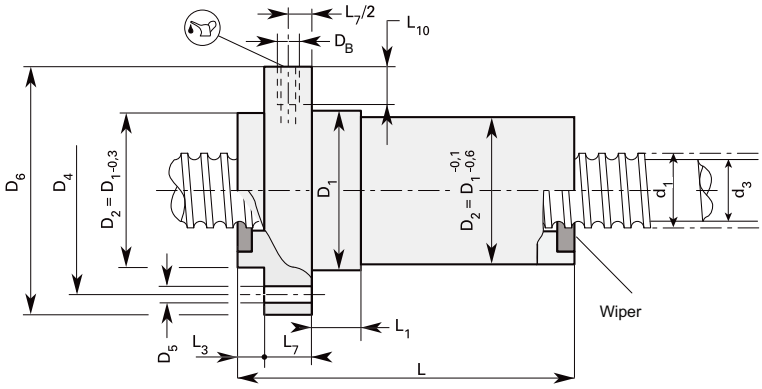

Drilling pattern

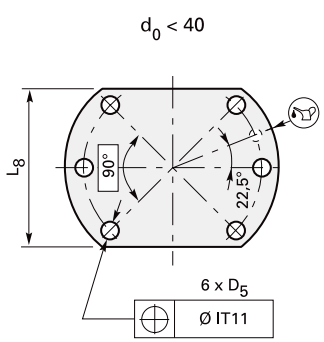

Drilling pattern 2

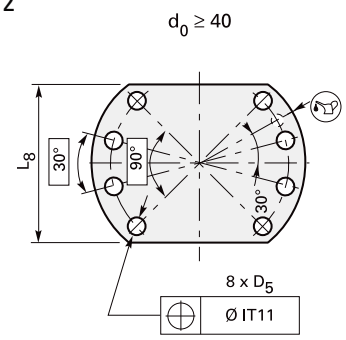

Have you not found the correct size?
Should you have any further questions, please contact our engineers

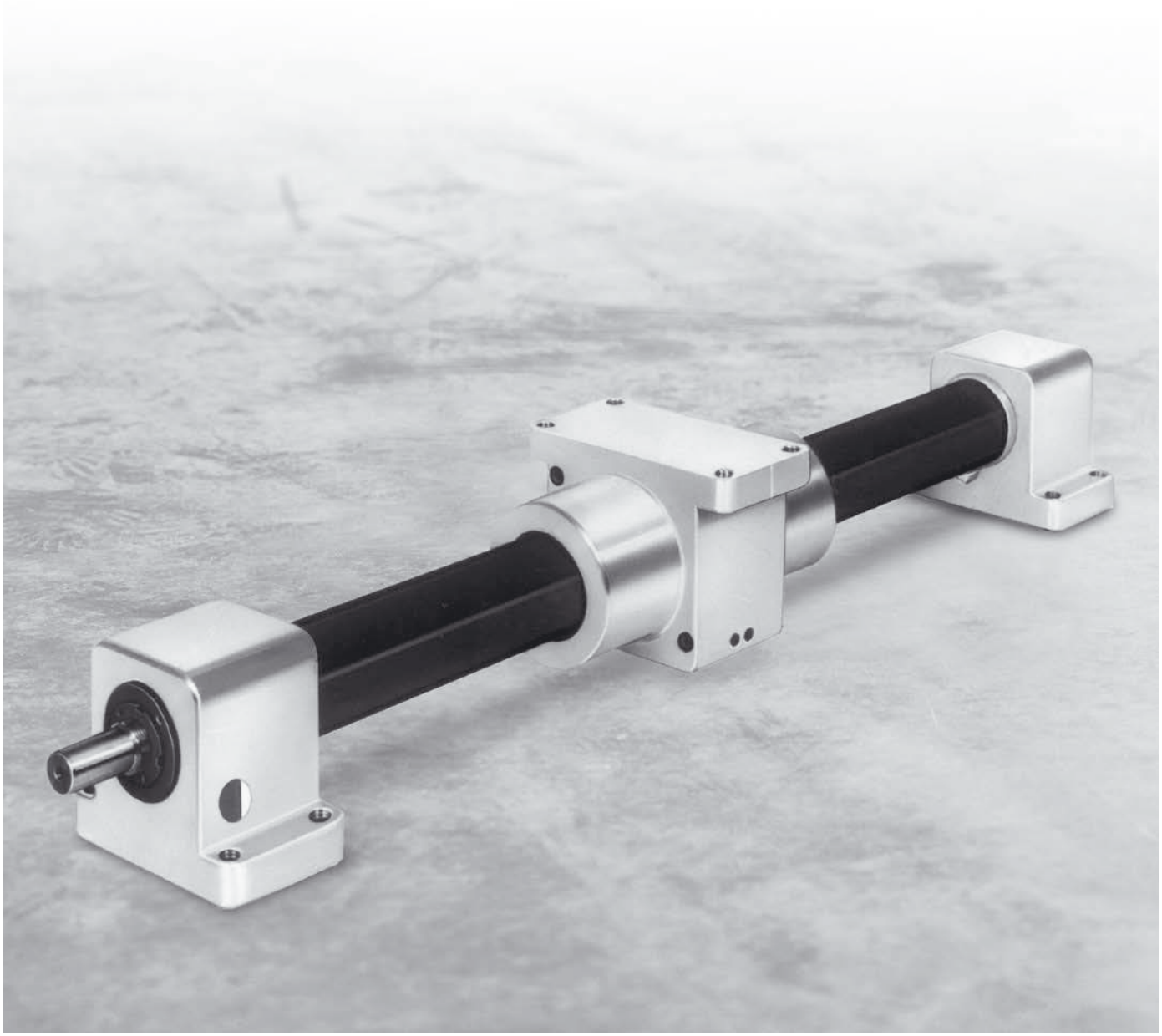

KOKON recirculating ball screw with full protection for harsh operating conditions

The KOKON® recirculating ball screw is perfectly suited for harsh, very dirty applications and applications with long travels.

Complete with shaft, cover and bearings as a ready-to-fit motion system. The central housing with preloaded nut unit and cover band return may be mounted in various orientations.

KGT cover in impact resistant elastomeric polymer PA 12.

Simple maintenance thanks to easy accessibility for relubrication.

All dimensions for the cover are dependent on the length of the elements.

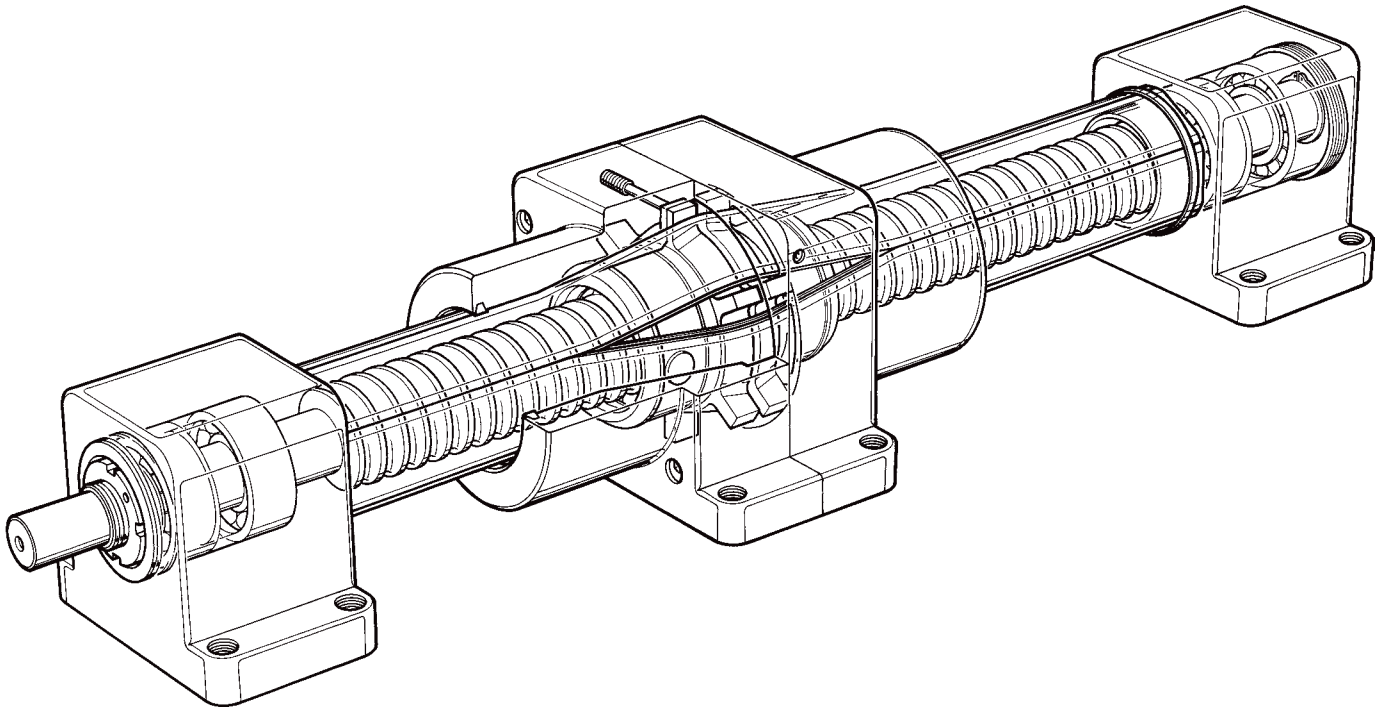

KOKON® Fully protected recirculating ball screw

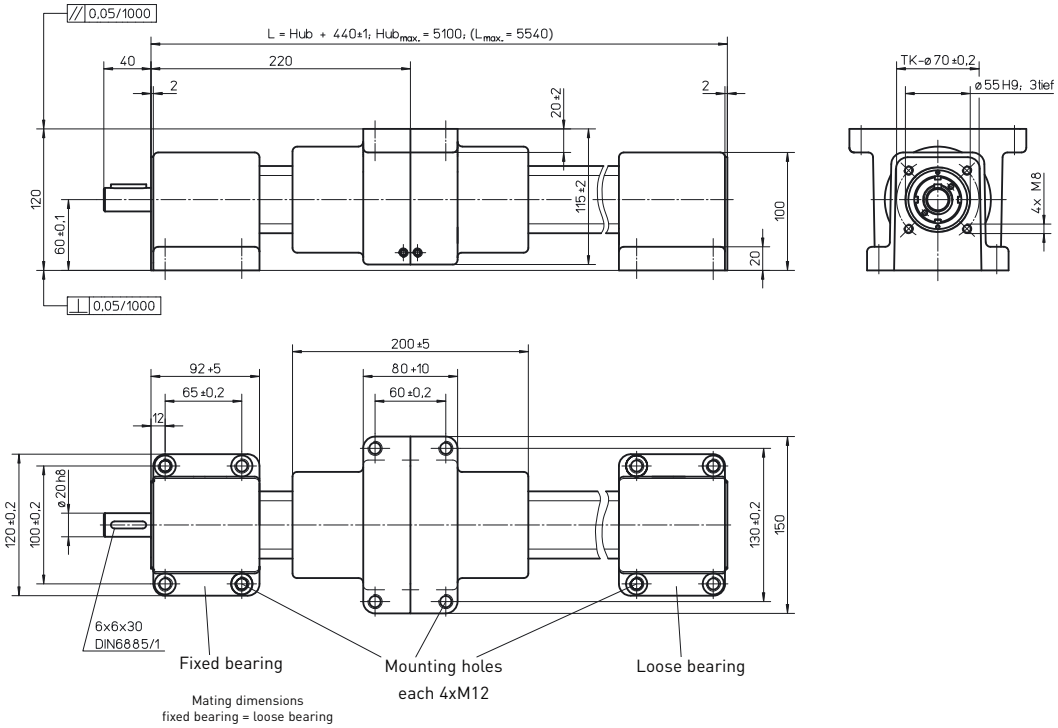

Motor housing accessories

	A
C120	100
C140	115
C160	130

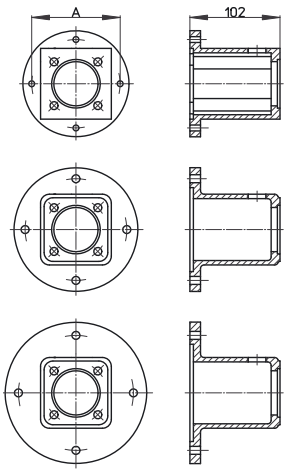

Technical data	KOKON 4005	KOKON 4010
■ Travel speed:	max. 250 mm/s	max. 500 mm/s
■ Repetition accuracy:	± 0.05 mm	± 0.05 mm
■ Acceleration:	max. 20 m/s²	max. 20 m/s²
■ Speed [rpm]:	max. 3000	max. 3000
■ Diameter:	40 mm	40 mm
■ Motion system element:	Preloaded recirculating ball screw	
■ Lead:	5 mm	10 mm
■ Drag torque M_0:	0.6 ± 0.2 Nm	1.6 ± 0.4 Nm
■ Axial load capacity C_0:	46000 N	46000 N
Axial load capacity C[1]:	23000 N	42000 N
Axial load capacity C[2]:	23000 N	38000 N
■ Efficiency η:	0.75	0.75
■ Weights		
Base without lift:	4.40 kg	4.40 kg
100 mm lift:	0.95 kg	0.95 kg
Nut unit with housing:	3.60 kg	3.60 kg
Material characteristics		
Cover band		
■ Cover band	PA12	PA12
■ Modulus of elasticity	300 N/mm²	300 N/mm²
■ Tear resistance	40 N/mm²	40 N/mm²
■ Shore hardness	54	54
■ Water absorption	max. 1.4 %	max. 1.4 %
■ Oil and coolant resistant	yes	yes

[1] DIN 69051 Draft April 1978
[2] DIN 69051 Draft May 1989

See p. 50 ff. for calculation principles

Notes

Bearing units for ball screws - fixed bearing

Type BK block

Ød1 hole
ØJ counter bore
Q depth

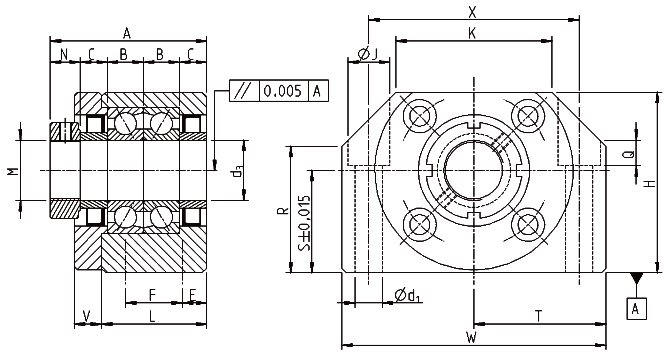

Part number	W (mm)	H (mm)	S (mm)
BK 8	52	32	17
BK 10	60	39	22
BK 12	60	43	25
BK 15	70	48	28
BK 17	86	64	39
BK 20	88	60	34
BK 25	106	80	48
BK 30	128	89	51
BK 40	160	110	60

AFK type flange –
drilling pattern with 4 holes

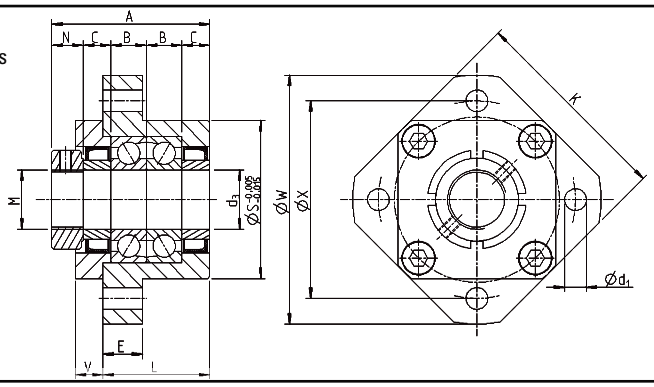

Part number	W (mm)	X (mm)	S (mm)
AFK 8	43	35	28
AFK 10	52	42	34
AFK 12	54	44	36
AFK 15	63	50	40
AFK 20	85	70	57

AFK type flange –
drilling pattern with 6 holes

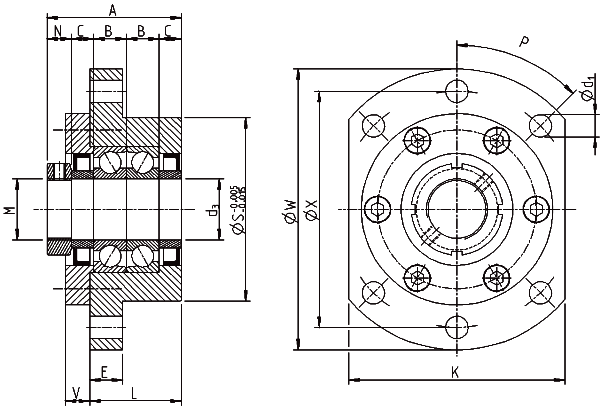

Part number	W (mm)	X (mm)	S (mm)
AFK 25	122	100	80
AFK 30	138	116	90
AFK 40	176	150	120

Standard end journal

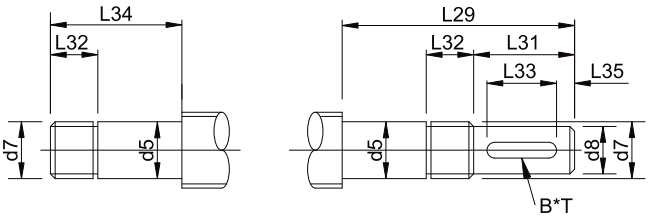

Type B Type C

d_0 (mm)	d_5 h_6 (mm)	d_7 (mm)
12	8	M8x1.0
16	10	M10x1.0
16	12	M12x1.0
20	15	M15x1.0
25	17	M17x1.0
25	20	M20x1.0
32	25	M25x1.5
40	30	M30x1.5
50	40	M40x1.5

Dimensions												
R (mm)	T (mm)	X (mm)	K (mm)	d_1 (mm)	J (mm)	Q (mm)	M (mm)	L (mm)	A (mm)	E (mm)	F (mm)	V (mm)
18.5	26	38	25	6.6	11	6.5	M8x1.0	23	33	11.5		5
26	30	46	34	6.6	11	6.5	M10x1.0	25	38	6	13	6
30	30	46	34	6.6	11	6.5	M12x1.0	25	38	6	13	6
33	35	54	40	6.6	11	6.5	M15x1.0	27	40	6	15	7
46	43	68	50	9	14	8.5	M17x1.0	35	52	8	19	9
42	44	70	52	9	14	8.5	M20x1.0	35	52	8	19	9
59	53	85	64	11	17.5	11	M25x1.5	42	65	10	22	11
63	64	102	76	14	20	13	M30x1.5	45	74	11	23	12
80	80	130	100	18	26	17.5	M40x1.5	61	93	14	33	14

Technical data		
Bearing type	Rated axial load (kN)	Maximum permissible load (kN)
EN8	1.64	1.48
7000A	6.70	2.78
7001A	7.25	3.10
7002A	7.75	4.07
7203A	14.00	5.95
7004A	12.95	9.70
7205A	20.60	11.70
7206B	28.60	16.60
7208B	45.00	27.70

Dimensions							
K (mm)	L (mm)	A. (mm)	E (mm)	V (mm)	d_1 (mm)	P (°)	M (mm)
35	21	30	7	5	3.4	90	M8x1.0
42	25	38	7	6	4.5	90	M10x1.0
44	25	38	8	6	4.5	90	M12x1.0
52	27	40	10	7	5.5	90	M15x1.0
68	37	52	15	7	6.6	90	M20x1.0

Technical data		
Bearing type	Rated axial load (kN)	Maximum permissible load (kN)
608	1.64	3.35
7000A	6.70	2.78
7001A	7.25	3.10
7002A	7.75	4.07
7204B	18.30	9.70

Dimensions							
K (mm)	L (mm)	A (mm)	E (mm)	V (mm)	d_1 (mm)	P (°)	M (mm)
92	42	65	15	11	11	45	M25x1.5
106	45	74	16	12	11	45	M30x1.5
128	61	93	19	15	14	45	M40x1.5

Technical data		
Bearing type	Rated axial load (kN)	Maximum permissible load (kN)
7205B	20.60	11.70
7206B	28.60	16.60
7208B	45.00	27.70

Dimensions									
d_8 h_7 (mm)	L_{29} (mm)	L_{31} (mm)	L_{32} (mm)	L_{34} (mm)	B P_9 (mm)	T (mm)	L_{33} (mm)	L_{35} (mm)	Note
6	47/45	15	8	32/30	2	2.2	10	2.5	BK/AFK
8	58	20	10	38	3	1.8	15	2.5	
10	63	25	10	38	3	1.8	18	3.5	
14	77	35	12	42	4	2.5	27	4	
15	94	40	14	54	5	3	32	4.5	BK only
16	99	45	14	54	5	3	36	4.5	
20	120	55	17	65	6	3.5	45	5	
25	133	64	17	69	8	4	50	7	
36	165	78	21	87	10	5	63	7.5	

Bearing units for ball screws – loose bearing

Type BF block

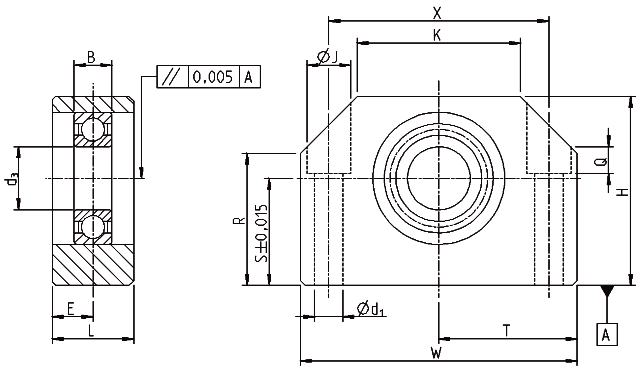

Part number	W (mm)	H (mm)	S (mm)
BF 8	52	32	17
BF 10	60	39	22
BF 12	60	43	25
BF 15	70	48	28
BF 17	86	64	39
BF 20	88	60	34
BF 25	106	80	48
BF 30	128	89	51
BF 40	160	110	60

AFF type flange –
drilling pattern with 4 holes

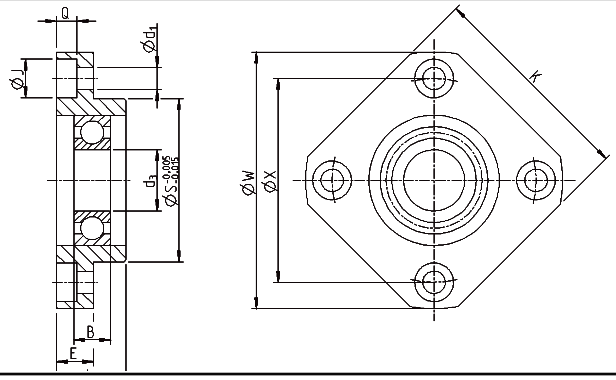

Part number	W (mm)	X (mm)	S (mm)
AFF 8	43	35	28
AFF 10	52	42	34
AFF 12	54	44	36
AFF 15	63	50	40
AFF 20	85	70	57

AFF type flange –
drilling pattern with 6 holes

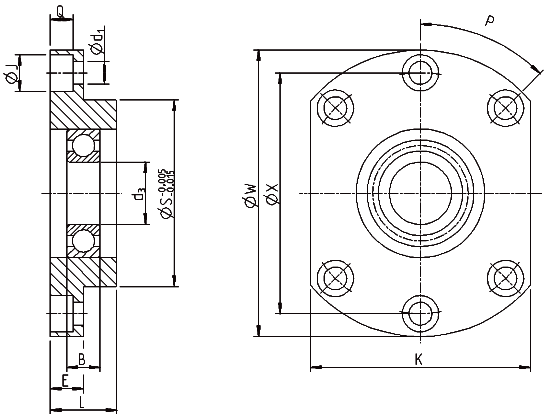

Part number	W (mm)	X (mm)	S (mm)
AFF 25	122	100	80
AFF 30	138	116	90
AFF 40	176	150	120

Standard end journal

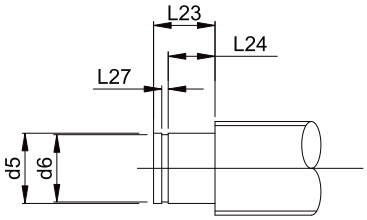

Type D

d_0 (mm)	d_5 h6 (mm)	d_6 h12 (mm)
12	8	7.6
16	10	11.5
16	12	11.5
20	15	14.0
25	17	19.0
25	20	19.0
32	25	23.9
40	30	28.6
50	40	37.5

Dimensions									Technical data	
R (mm)	T (mm)	X (mm)	K (mm)	d_1 (mm)	J (mm)	Q (mm)	L (mm)	E (mm)	Bearing type	Rated radial load (kN)
18.5	26	38	25	6.6	11	6.5	20	10	606	2.31
26	30	46	34	6.6	11	6.5	20	10	608	3.35
35	30	46	35	6.6	11	6.5	20	10	6001	4.65
38	35	54	40	6.6	11	6.5	20	10	6002	5.70
46	43	68	50	9	14	8.5	23	11.5	6203	9.75
50	44	70	52	9	14	8.5	26	13	6004	9.55
70	53	85	64	11	17.5	11	30	15	6205	14.30
78	64	102	76	14	20	13	32	16	6206	19.80
90	80	130	100	18	26	17.5	37	18.5	6208	29.70

Dimensions								Technical data	
K (mm)	L (mm)	E (mm)	N (mm)	d_1 (mm)	J (mm)	Q (mm)	P (°)	Bearing type	Rated radial load (kN)
35	11	6	4	3.4	6.5	4	90	606	2.31
42	12	7	4	4.5	8	5	90	608	3.35
44	15	8	4	4.5	8	5	90	6001	4.65
52	17	9	4	5.5	9.5	6	90	6002	5.70
68	20	14	4	6.6	11	10	90	6204	13.00

Dimensions								Technical data	
K (mm)	L (mm)	E (mm)	N (mm)	d_1 (mm)	J (mm)	Q (mm)	P (°)	Bearing type	Rated radial load (kN)
92	30	15	6	11	17.5	11	45	6205	14.30
106	32	15	6	11	17.5	11	45	6206	19.80
128	36	18	6	14	20	13	45	6208	29.70

Dimensions		
L_{23} (mm)	L_{24} (mm)	L_{27} H13 (mm)
7.5	6	0.9
9	7	1.1
10.5	8	1.1
13	9	1.1
16	12	1.3
16	12	1.3
19	15	1.3
21	16	1.6
25	18	1.85

KON adapter support

Adapter support for radial fixing of KGF ball screw flanged nut.

Material: 1.0065 (St37) or 1.0507 (St52).

Drilling pattern 1 in accordance with DIN 69051

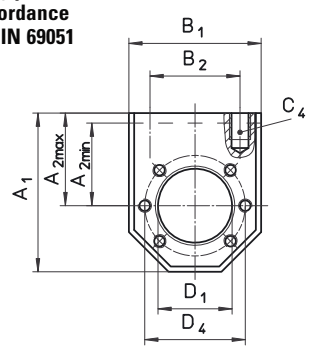

Drilling pattern 2 in accordance with DIN 69051

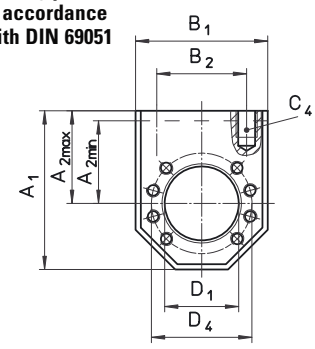

Drilling pattern 3 THOMSON NEFF standard

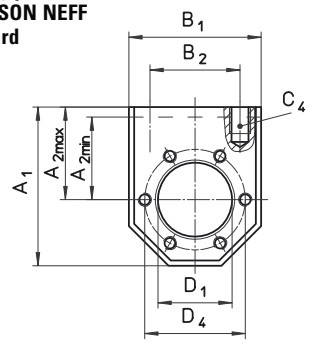

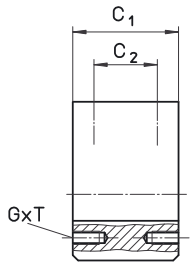

For KGF	Drilling pattern	Dimensions [mm] A_1	$A_{2\,max}$ [1]	$A_{2\,min}$	B_1	B_2	C_1	C_2	C_4 [1]	D_1	D_4	Th x D
KON 1605	3	60	35	25	50	34	40	24	M 8x15	28	38	M 5x10
KON 1605/1610	1	60	35	25	50	34	40	24	M 8x15	28	38	M 5x10
KON 2005	3	68	37.5	29	58	39	40	24	M 8x15	32	45	M 6x12
KON 2005	1	68	37.5	30	58	39	40	24	M 8x15	36	47	M 6x12
KON 2020/2050	3	75	42.5	32.5	65	49	40	24	M 10x15	35	50	M 6x12
KON 2505	3	75	42.5	32.5	65	49	40	24	M 10x15	38	50	M 6x12
KON 2505/2510/2520/ 2525/2550	1	75	42.5	32.5	65	49	40	24	M 10x12	40	51	M 6x12
KON 3205	3	82	45	37	75	54	50	30	M 10x12	45	58	M 6x12
KON 3205/3232	1	92	50	40	85	60	50	30	M 12x15	50	65	M 8x12
KON 3210/3240/4005	3	92	50	42	85	60	50	30	M 12x15	53	68	M 6x12
KON 3210/3220	1	92	50	40	85	60	50	30	M 12x15	53	65	M 8x12
KON 4010	3	120	70	50	100	76	65	41	M 14x25	63	78	M 8x14
KON 4005/4010/4020/4040	2	120	70	50	100	76	65	41	M 14x25	63	78	M 8x14
KON 5010	3	135	77.5	57.5	115	91	88	64	M 16x25	72	90	M 10x16
KON 5010	2	135	77.5	57.5	115	91	88	64	M 16x25	75	93	M 10x16
KON 5020	2	152	87.5	65	130	101	88	64	M 16x30	85	103	M 10x16
KON 6310	3	152	87.5	65	130	101	88	64	M 16x30	85	105	M 10x16
KON 6320	2	172	97.5	75	150	121	88	64	M 16x30	95	115	M 12x18
KON 8010	3	172	97.5	75	150	121	88	64	M 16x30	105	125	M 12x18

[1] Standard = $A_{2\,max}$ (as delivered)

KAR universal joint adapter

Universal joint adapter for universally mounting on KGF ball screw flanged nut.

Material: 1.0065 (St37) or 1.0507 (St52).

Drilling pattern 1 in accordance with DIN 69051

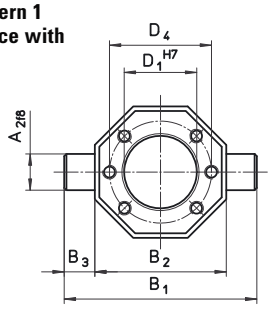

Drilling pattern 2 in accordance with DIN 69051

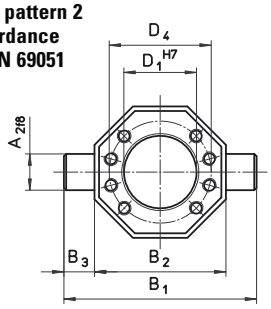

Drilling pattern 3 THOMSON NEFF standard

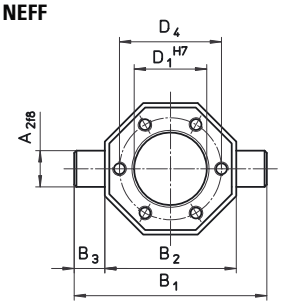

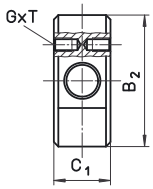

For KGF	Drilling pattern	Dimensions [mm] A_2	B_1	B_2	B_3	C_1	D_1	D_4	Th x D
KAR 1605	3	12	70	50	10	20	28	38	M 5x10
KAR 1605/1610	1	12	70	50	10	20	28	38	M 5x10
KAR 2005	3	16	85	58	13.5	25	32	45	M 6x12
KAR 2005	1	16	85	58	13.5	25	36	47	M 6x12
KAR 2020/2050	3	18	95	65	15	25	35	50	M 6x12
KAR 2505	3	18	95	65	15	25	38	50	M 6x12
KAR 2505/2510/2520/2525/2550	1	18	95	65	15	25	40	51	M 6x12
KAR 3205	3	20	110	75	17.5	30	45	58	M 6x12
KAR 3205/3232	1	25	125	85	20	30	50	65	M 8x12
KAR 3210/3240/4005	3	25	125	85	20	30	53	68	M 6x12
KAR 3210/3220	1	25	125	85	20	30	53	65	M 8x12
KAR 4010	3	30	140	100	20	40	63	78	M 8x14
KAR 4005/4010/4020/4040	2	30	140	100	20	40	63	78	M 8x14
KAR 5010	3	40	165	115	25	50	72	90	M 10x16
KAR 5010	2	40	165	115	25	50	72	93	M 10x16
KAR 5020	2	40	180	130	25	50	85	103	M 10x16
KAR 6310	3	40	180	130	25	50	85	105	M 10x16
KAR 6320	2	50	200	150	25	60	95	115	M 12x18
KAR 8010	3	50	200	150	25	60	105	125	M 10x16

SF helical spring cover

Helical spring cover for protection against ambient influences.
Suitable for horizontal and vertical installation.

Material: Hardened spring steel.

A centering sleeve is required on the mounting face of the nut where a helical spring cover is used.

Only available for KGF-D, KGF-N, KGM-D and KGM-N style nuts.

Table headings are nominal diameter x lead (e.g. 16x05).

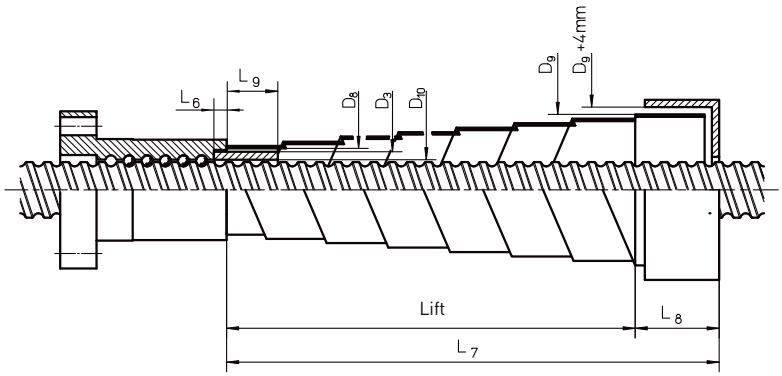

For 16x05
16x10

D_3 = 22 mm D_{10} = 17 mm L_6 = 6 mm L_9 = 21 mm		
Designation D_8/L_{7v} [1]$/L_8$	L_{7h} [2]	D_9
SF 25/100/20	60	35
SF 25/150/20	110	38
SF 25/200/20	160	40
SF 25/250/20	210	44
SF 25/300/30	240	43
SF 25/350/30	290	46
SF 25/400/30	340	49
SF 25/450/40	370	48
SF 25/500/40	420	51

For 25x05 25x25
25x10 25x50
25x10

D_3 = 28 mm D_{10} = 26 mm L_6 = 6 mm L_9 = 21 mm		
Designation D_8/L_{7v} [1]$/L_8$	L_{7h} [2]	D_9
SF 30/150/30	90	39
SF 30/250/30	190	44
SF 30/350/30	290	49
SF 30/450/40	370	53
SF 30/550/40	470	58
SF 30/650/50	550	55
SF 30/750/50	650	59

For 32x05
32x40
(continued)

D_3 = 38 mm D_{10} = 33 mm L_6 = 6 mm L_9 = 26 mm		
Designation D_8/L_{7v} [1]$/L_8$	L_{7h} [2]	D_9
SF 40/550/50	450	61
SF 40/650/50	550	65
SF 40/750/50	650	69
SF 40/450/60	330	55
SF 40/550/60	430	58
SF 40/650/60	530	62
SF 40/750/60	630	66
SF 40/900/60	780	70
SF 40/650/75	500	62
SF 40/750/75	600	66
SF 40/900/75	750	72
SF 40/1100/78	950	78
SF 40/1300/75	1150	84
SF 40/1500/75	–	90
SF 40/1000/100	800	66
SF 40/1200/100	1000	70
SF 40/1500/100	1300	78
SF 40/1800/100	1600	82
SF 40/1800/120	1560	82
SF 40/2000/120	1760	86
SF 40/2200/120	–	91

For 32x10
(32x20)

D_3 = 44 (48) mm D_{10} = 35 (39) mm L_6 = 8 mm L_9 = 27 mm		
Designation D_8/L_{7v} [1]$/L_8$	L_{7h} [2]	D_9
SF 50/150/30	90	63
SF 50/250/30	190	68
SF 50/250/50	150	62
SF 50/350/50	250	66
SF 50/450/50	350	70
SF 50/550/50	450	73
SF 50/550/60	430	68
SF 50/650/60	530	73
SF 50/750/60	630	76
SF 50/750/75	600	78
SF 50/900/75	750	84
SF 50/1100/75	950	90
SF 50/1100/100	900	77
SF 50/1300/100	1100	80
SF 50/1500/100	1300	87
SF 50/1800/100	–	94
SF 50/1700/120	1460	91
SF 50/1900/120	1660	97
SF 50/2100/120	1860	102
SF 50/2300/120	–	105
SF 50/2500/120	–	111
SF 50/2800/120	–	118
SF 50/2800/150	2500	119
SF 50/3000/150	–	124
SF 50/3000/180	2640	123
SF 50/3250/180	–	130
SF 50/3250/200	2650	128
SF 50/3500/200	–	134

For 20x05
20x20
20x50

D_3 = 26 mm D_{10} = 21 mm L_6 = 6 mm L_9 = 21 mm		
Designation D_8/L_{7v} [1]$/L_8$	L_{7h} [2]	D_9
SF 30/150/30	90	39
SF 30/250/30	190	44
SF 30/350/30	290	49
SF 30/450/40	370	53
SF 30/550/40	470	58
SF 30/650/50	550	55
SF 30/750/50	650	59

For 32x05
32x40

D_3 = 38 mm D_{10} = 33 mm L_6 = 6 mm L_9 = 26 mm		
Designation D_8/L_{7v} [1]$/L_8$	L_{7h} [2]	D_9
SF 40/150/30	90	51
SF 40/250/30	190	56
SF 40/350/30	290	60
SF 40/450/40	370	64
SF 40/550/40	470	68
SF 40/350/50	250	55
SF 40/450/50	350	59

[1] $L_{7v} = L_7$ vertical installation
[2] $L_{7h} = L_7$ horizontal installation

SF helical spring cover

For 40x05
40x40

D_3 = 48 mm D_{10} = 42 mm L_6 = 6 mm L_9 = 26 mm		
Designation D_8/L_{7v} [1]$/L_8$	L_{7h} [2]	D_9
SF 50/150/30	90	63
SF 50/250/30	190	68
SF 50/250/50	150	62
SF 50/350/50	250	66
SF 50/450/50	350	70
SF 50/550/50	450	73
SF 50/550/60	430	68
SF 50/650/60	530	73
SF 50/750/60	630	76
SF 50/750/75	600	78
SF 50/900/75	750	84
SF 50/1100/75	950	90
SF 50/1100/100	900	77
SF 50/1300/100	1100	80
SF 50/1500/100	1300	87
SF 50/1800/100	–	94
SF 50/1700/120	1460	91
SF 50/1900/120	1660	97
SF 50/2100/120	1860	102
SF 50/2300/120	–	105
SF 50/2500/120	–	111
SF 50/2800/120	–	118
SF 50/2800/150	2500	119
SF 50/3000/150	–	124
SF 50/3000/180	2640	123
SF 50/3250/180	–	130
SF 50/3250/200	2650	128
SF 50/3500/200	–	134

For 40x10
40x20

D_3 = 53 mm D_{10} = 46 mm L_6 = 10 mm L_9 = 35 mm		
Designation D_8/L_{7v} [1]$/L_8$	L_{7h} [2]	D_9
SF 55/150/30	90	68
SF 55/250/30	190	73
SF 55/250/50	150	66
SF 55/350/50	250	71
SF 55/450/50	350	74
SF 55/550/50	450	77
SF 55/550/60	430	75
SF 55/650/60	530	79
SF 55/750/60	630	83
SF 55/750/75	600	83
SF 55/900/75	750	89
SF 55/1100/75	950	94
SF 55/1100/100	900	88
SF 55/1300/100	1100	89
SF 55/1500/100	1300	94
SF 55/1800/100	–	102
SF 55/1700/120	1460	96
SF 55/1900/120	1660	103
SF 55/2100/120	1860	106
SF 55/2300/120	2060	110
SF 55/2500/120	–	117
SF 55/2800/120	–	119
SF 55/2800/150	2500	122
SF 55/3000/150	–	126
SF 55/3000/180	2640	127
SF 55/3250/180	–	130

For 50x10
(50x20)

D_3 = 62 mm D_{10} = 56 mm L_6 = 11 mm L_9 = 39 mm		
Designation D_8/L_{7v} [1]$/L_8$	L_{7h} [2]	D_9
SF 65/250/30	190	85
SF 65/250/50	150	76
SF 65/350/50	250	83
SF 65/450/50	350	88
SF 65/550/60	430	88
SF 65/650/60	530	92
SF 65/750/60	630	96
SF 65/750/75	600	93
SF 65/900/75	750	99
SF 65/1100/75	950	107
SF 65/1100/100	900	95
SF 65/1300/100	1100	100
SF 65/1500/100	1300	109
SF 65/1800/100	–	120
SF 65/1700/120	1460	106
SF 65/1900/120	1660	109
SF 65/2100/120	1860	113
SF 65/2300/120	2060	118
SF 65/2500/120	–	128
SF 65/2800/120	–	132
SF 65/2800/150	2500	133
SF 65/3000/150	–	139
SF 65/3000/180	2640	136
SF 65/3250/180	–	146
SF 65/3250/200	2850	140

For 63x10
63x20

D_3 = 74 mm D_{10} = 66 mm L_6 = 11 mm L_9 = 49 mm		
Designation D_8/L_{7v} [1]$/L_8$	L_{7h} [2]	D_9
SF 75/250/50	150	89
SF 75/350/50	250	94
SF 75/450/50	350	101
SF 75/550/60	430	100
SF 75/650/60	530	103
SF 75/750/60	630	109
SF 75/650/75	500	99
SF 75/750/75	600	104
SF 75/900/75	750	111
SF 75/1100/100	900	108
SF 75/1300/100	1100	114
SF 75/1500/100	1300	120
SF 75/1700/100	1500	126
SF 75/1500/120	1260	115
SF 75/1800/120	1560	125
SF 75/2000/120	1760	128
SF 75/2200/120	–	132
SF 75/2000/150	1700	135
SF 75/2400/150	2100	141
SF 75/2800/150	–	145
SF 75/2800/180	2440	142
SF 75/3000/180	–	148
SF 75/3250/180	–	156
SF 75/3250/200	2850	148
SF 75/3500/200	–	158

[1] $L_{7v} = L_7$ vertical installation
[2] $L_{7h} = L_7$ horizontal installation

Calculation

Buckling load

Buckling load F_c [N]

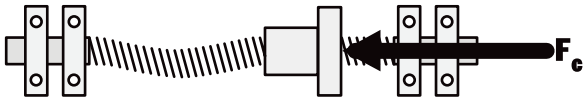

1A 1B

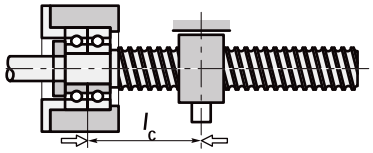

$f_c = 0{,}25$

2

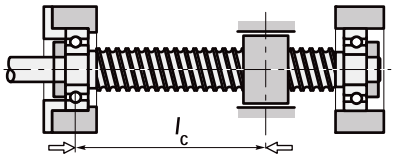

$f_c = 1$

3

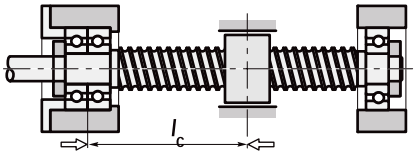

$f_c = 2$

4

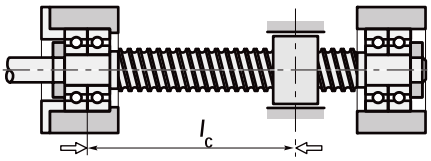

$f_c = 4$

$F_{cp} = 0.8 \cdot F_c \cdot f_c \geq F_{max.}$ [N]

$F_c = \dfrac{1.017 \cdot 10^5 \cdot d^4}{l_c^2}$ [N]

D_w = ball diameter

$d \approx \dfrac{d_0 + d_3}{2}$ [mm]

$d_3 \approx d_0 - D_w$

Index p → permissible

l_c [mm]

Speeds

Limit speed n_l [min^{-1}]	Tolerance class TK	≤ 5	> 5
	n^l [min^{-1}]	$\dfrac{140.000}{d_0\,[mm]}$	$\dfrac{100.000}{d_0\,[mm]}$

Critical speed n_{cr} [min^{-1}]

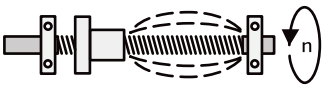

$n_{crp} = 0.8 \cdot n_{cr} \cdot f_{cr} > n_{max}$ [min^{-1}]

$n_{cr} = 1.2 \cdot 10^8 \cdot \dfrac{d}{l_{cr}^2}$ [min^{-1}]

$d \approx \dfrac{d_0 + d_3}{2}$ [mm]

$d_3 \approx d_0 - D_w$ [mm] D_w = ball diameter

index p → permissible

1A 1B

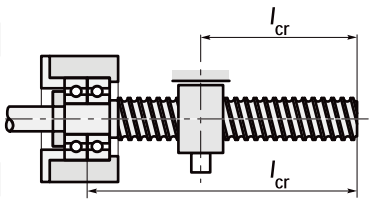

$f_{cr} = 0{,}356$

2

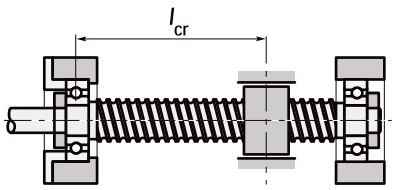

$f_{cr} = 1$

3

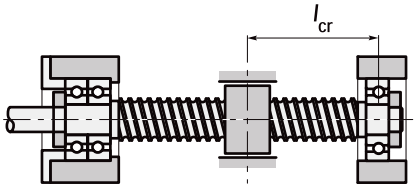

$f_{cr} = 1{,}56$

4

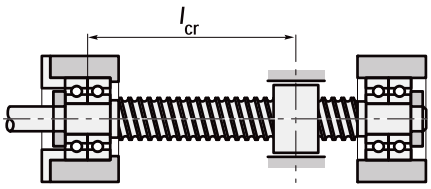

$f_{cr} = 2{,}27$

Calculation

Service life

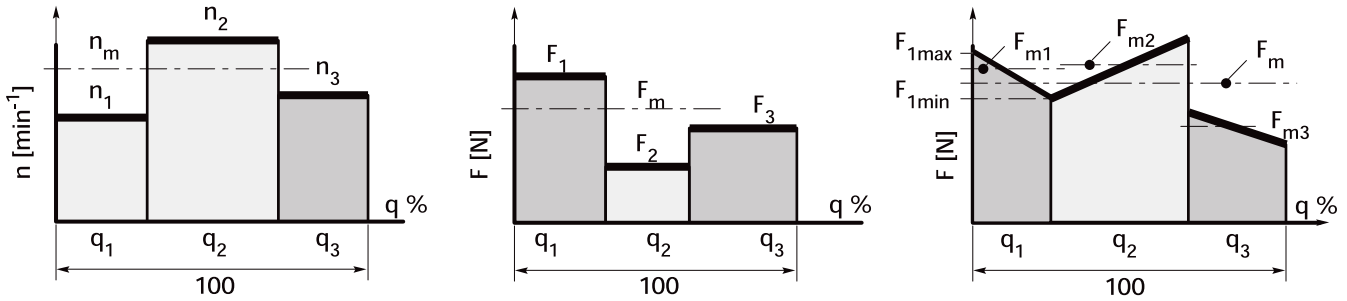

$$n_m = \sum_{i=1}^{n} n_i \cdot \frac{q_i}{100} \; [\text{min}^{-1}]$$

$$F_m = \left(\sum_{i=1}^{n} F_i^3 \cdot \frac{n_i}{n_m} \cdot \frac{q_i}{100} \right)^{1/3} [\text{N}]$$

$$F_m = \left(\sum_{i=1}^{n} F_{mi}^3 \cdot \frac{n_i}{n_m} \cdot \frac{q_i}{100} \right)^{1/3} [\text{N}]$$

Modified service life in revolutions

$$L_{10} = \left[\frac{C_{am}}{F_m} \right]^3 \cdot 10^6$$

n_m = Equivalent speed

F_m = Equivalent load

Modified service life in hours

$$L_{h10} = \frac{L_{10}}{n_m \cdot 60}$$

C_{am} = Modified dyn. rated load [N]

Rated load/service life calculation based on DIN 69 051/4

Installation

Application of force

Optimum		Please contact us regarding radial forces	
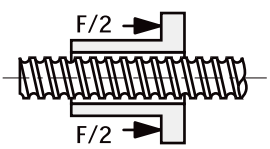	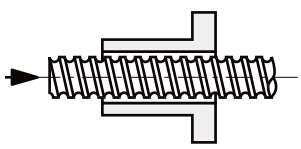	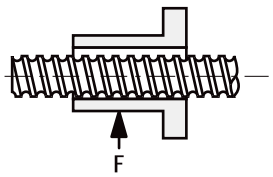	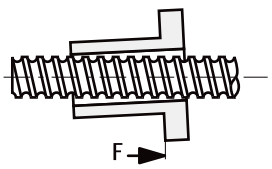

Installation tolerances

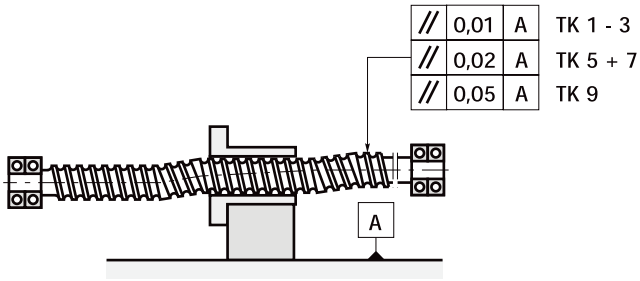

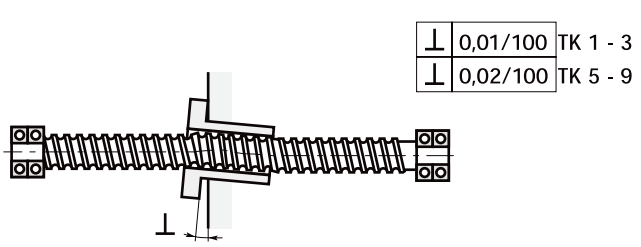

Calculation

Efficiency and torques

Efficiency is affected by many operating influences as well as geometric data.
This means that practical values may fluctuate in relation to the calculated values by ± 5%.

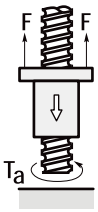

Theoretical efficiency (η) when converting torque into axial force is calculated as follows:

$$\eta = \frac{\tan \varphi}{\tan (\varphi - \rho'')} \quad \text{where } \tan \varphi = \frac{P_{h0}}{d_0 \cdot \pi}$$

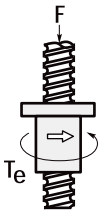

The theoretical efficiency (η') when converting an axial force into a torque is calculated as follows:

$$\eta' = \frac{\tan (\varphi - \rho'')}{\tan\varphi} \quad \text{where } \tan \varphi = \frac{P_{h0}}{d_0 \cdot \pi}$$

The theoretical level of efficiency is reduced by around 5% to make allowances for operating influences such as speed, temperature and lubrication. If the ratio of load F to dynamic rated load Cam is less than 0.5, a further reduction is made based on the load factor f_l (see table below).

The resulting efficiency only applies to the ball screw. The figure assumes the ball screw is lubricated but has no wiper or shaft bearing.

If you are interested in special measures for improving efficiency, please contact us.

Friction angle ρ″ (rhò)

ρ″ = 0.23° At tolerance class P and T1 – T3

ρ″ = 0.34° At tolerance class T5

P_{h0}
+
d_0 See tables of dimensions

$\frac{F}{C_{am}}$	f_l
0.4	0.99
0.3	0.98
0.2	0.97
0.1	0.96

Example

$$\frac{F}{C_{am}} = \frac{10.000\ N}{53.900\ N} = 0.19 \rightarrow fl \approx 0.97$$

$$\tan \varphi = \frac{10}{40 \cdot \pi} = 0.08$$

$$\varphi = 4.55°$$

Practical efficiency after running in

$F = 10.000\ N$

$C_{am} = 53.900\ N$

$\eta = 0.08$

$\tan(4.55° + 0.23°)$

$\eta = 0.957$

$\eta_p = \eta \cdot 0.95 \cdot f_l$

$\eta_p = 0.957 \cdot 0.95 \cdot 0.97$

$\eta_p = 0.88 \pm 5\%$

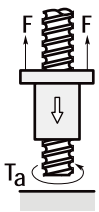

Converting torque into an axial force requires an input torque of:

$$T_a = \frac{F \cdot P_{h0}}{2000 \cdot \pi \cdot \eta_p} \quad [Nm]$$

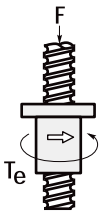

Converting an axial force into a torque produces an output torque of:

$$T_e = \frac{F \cdot P_{h0} \cdot \eta'_p}{2000 \cdot \pi} \quad [Nm]$$

F = Axial load

C_{am} = Dynamic rated load

f_l = Load factor

φ (phi) = Lead angle

η (êta) = Theoretical efficiency

η_p η'_p = Practical efficiency

T_a = Input torque [Nm]

T_e = Output torque [Nm]

Calculation

Stiffness R

The total stiffness Rtot of a ball screw is composed of the stiffness of the shaft R_s and the stiffness of the nut unit $R_{nu,\,ar}$.

$$\frac{1}{R_{tot}} = \frac{1}{R_s} + \frac{1}{R_{nu,\,ar}} \quad [N/\mu m]$$

Shaft stiffness depends on the type of bearing.

Fixed bearing at one end

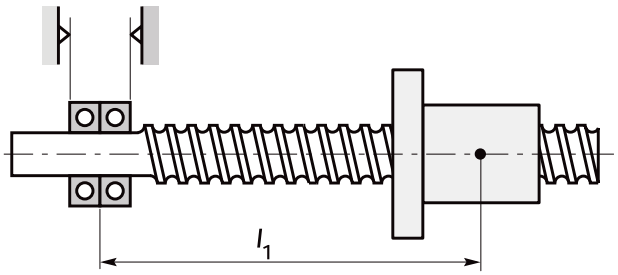

$$R_{s1} = \frac{A \cdot E}{l_1 \cdot 10^3} \quad [N/\mu m]$$

$$E = 21 \cdot 10^4 \ N/mm^2$$

l, l_1, l_2 [mm]

Fixed bearing at both ends

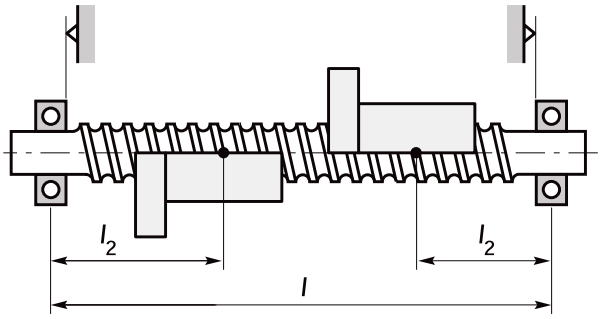

$$R_{s2} = \frac{A \cdot E}{l_2 \cdot 10^3} \cdot \frac{l}{l - l_2} \quad [N/\mu m] \quad \rightarrow \quad l_2 \leq l/2$$

$R_{s2\,min}$ at $l_2 = l/2$

Reference values for shaft cross-sections

d0	16	20	25	32		40		50	63	80	
P_{h0}	5	5	5–25	5	10	5	10–40	10, 20	10, 20	10	20
A [mm²]	162	263	428	723	685	1155	1075	1705	2823	4650	4412

Acceptance conditions

Permissible travel variances

Type	P	Positioning ball screws	Type	T	Transport ball screws

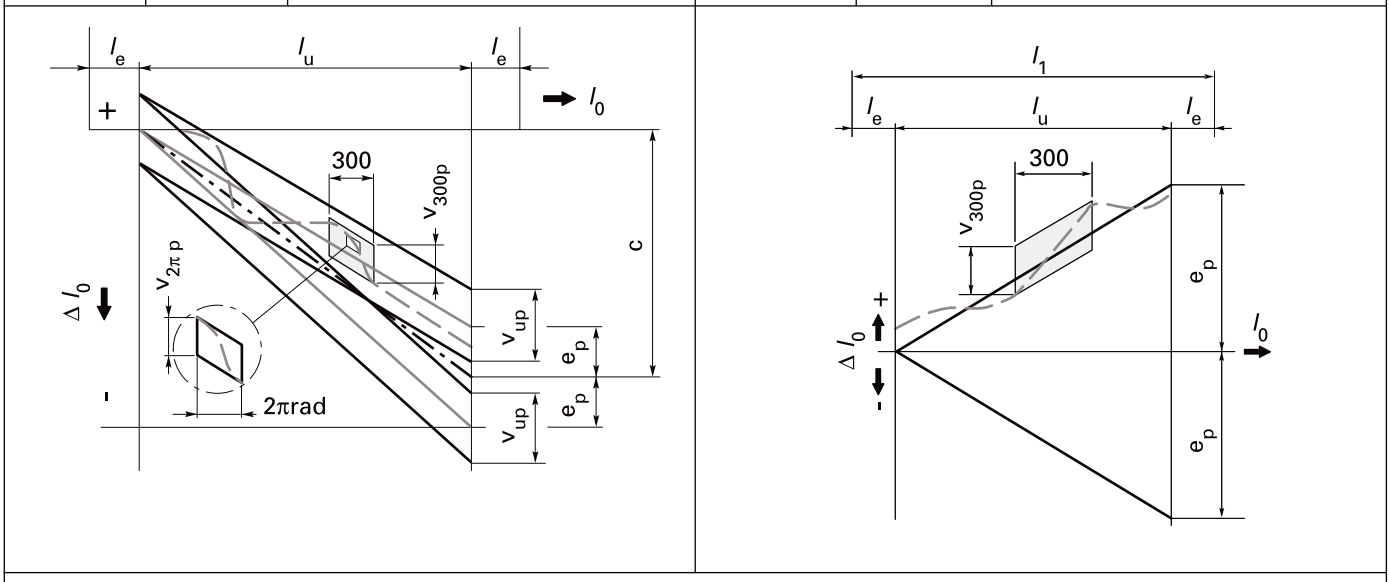

l_1 = Axial thread length l_u = Useful travel l_e = Overrun = Tab. 2 l_0 = Nominal distance Δl_0 = Travel deviation

		P1 – 3	P5	t
v_{300p}	Permissible travel variance over 300 mm	Tab. 1	Tab. 1	Tab. 1
$v_{2\pi p}$	Permissible travel variance over 2 πtravel	Tab. 1	Tab. 1	–
c	Travel compensation	-0.01/1000	0	0
e_p	Limit deviations for useful distance l_u	Tab. 3	Tab. 3	$\pm \frac{l_u}{300} \cdot v_{300p}$
v_{up}	Permissible travel variance over useful travel l_u	Tab. 3	Tab. 3	–

Tab. 1	Tolerance class				
	1	3	4	5	7
v300p [µm]	6	12	18	23	52
v2πp [µm]	4	6	7	8	12

Tab. 2						
Nominal lead	Ph [mm]	≤ 2.5	≤ 5	≤ 10	≤ 20	> 20
Lead error	le [mm]	10	20	40	60	100

Tab. 3		l_u [mm]	>	0	315	400	500	630	800	1000	1250	1600	2000	2500	3150	4000	5000	6300	8000	10000	12500
			≤	315	400	500	630	800	1000	1250	1600	2000	2500	3150	4000	5000	6300	8000	10000	12500	16000
Tolerance class	1	e_p	[µm]	6	7	8	9	10	11	13	15	18	22	26	32	39	48	60	76	94	115
		v_{up}		6	6	7	7	8	9	10	11	13	15	17	21	27	33	40	50	61	76
	3	e_p		12	13	15	16	18	21	24	29	35	41	50	62	76	92	115	140	175	220
		v_{up}		12	12	13	14	16	17	19	22	25	29	34	41	49	61	75	92	113	140
	4	e_p		18	18	20	22	25	28	33	39	46	55	68	84	102	125	159	199	240	290
		v_{up}		18	19	20	21	23	26	29	33	38	44	52	56	68	83	101	124	152	189
	5	e_p		23	25	27	32	36	40	47	55	65	78	96	115	140	170	210	270	330	410
		v_{up}		23	25	26	29	31	34	39	44	51	59	69	82	99	119	142	174	213	265

Acceptance conditions

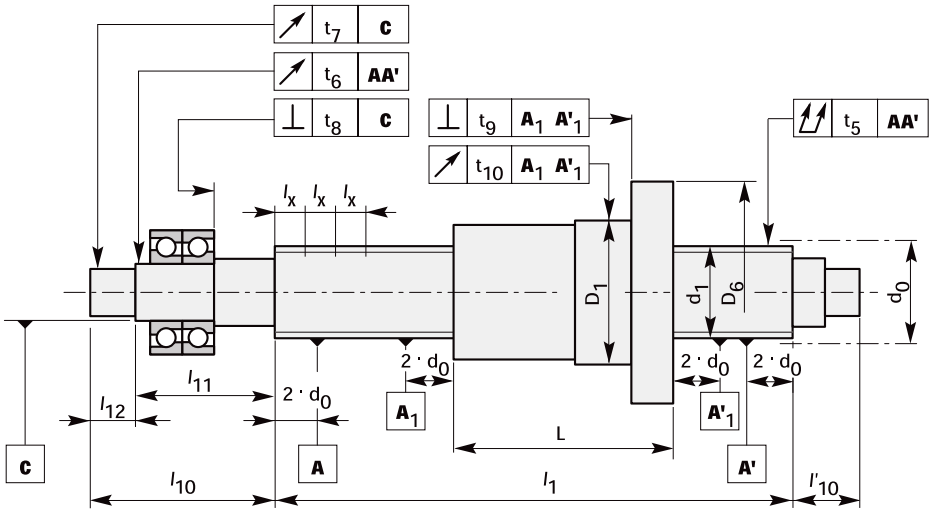

Acceptance	Description					Tolerance class			
						1	3	5	7
	d_0 [mm]	l_x [mm]				Permissible deviation t_p [µm]			
		>	≤	>	≤				
t_5	Radial runout for determining degree of straightness 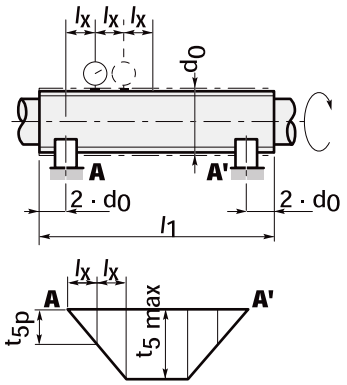	6	12	–	80	20	25	32	40
		12	25	–	160				
		25	50	–	315				
		50	100	–	630				
		100	200	–	1250				
		$t_{5\,max.}$ for $l_1/d_0 \leq 40$				40	50	64	80
		$t_{5\,max.}$ for $40 < l_1/d_0 \leq 60$				60	75	96	120
		$t_{5\,max.}$ for $60 < l_1/d_0 \leq 80$				100	125	160	200
		$t_{5\,max.}$ for $80 < l_1/d_0 \leq 100$				160	200	256	320
t6	Concentricity t_6 according to d_0 and l_{11}. The greater of the two values applies.	d_0		l_{11}					
		>	≤	>	≤				
		–	32	–	80	10	12	20	32
			63	80	160	12	16	20	40
		63	125	160	250	16	20	25	50
		125	–	250	400	20	25	32	63
		–	–	400	630	25	32	40	80
		–	–	630	–	32	40	50	100

Acceptance conditions

Acceptance	Description	TK				1	3	5	7
		d_0 [mm]		l_{12} [mm]		Permissible deviation t_p [µm]			
		>	≤	>	≤				
t_7	Concentricity t_7 selected according to d_0 and l_{12}. The greater of the two values applies.	–	32	–	80	5	6	8	10
		32	63	80	160	6	8	10	12
		63	125	160	250	8	10	12	16
		125	–	250	400	10	12	16	20
		–	–	400	–	–	16	20	25
t_8	Axial runout	6	63	–	–	3	4	5	6
		63	125	–	–	4	5	6	8
		125	200	–	–	–	6	8	10
t_9; t_{10}	Axial and radial runout only for preloaded nut units or backlash-free nut units	D_6; D							
		>		≤					
		16		32		10	12	16	20
		32		63		12	16	20	25
		63		125		16	20	25	32
		125		250		20	25	32	40
		250		500		–	32	40	50
t_{12}	Drag torque (T_p) as a consequence of preloading (F_p) of the nut unit	Nominal drag torque				Permissible deviation ΔT_{p0} (%)			
		T_{p0} [Nm]				For $\frac{l_u}{d_0} \leq 40$ and $l_u \leq 4000$ mm			
		>		≤					
	n_{const} = 100 rpm	–		0.3		30	35	40	50
		0.3		0.6		25	30	35	40
		0.6		1.0		20	25	30	35
		1.0		2.5		15	20	25	30
		2.5		6.3		10	15	20	25
	ISO VG 100 lubricating oil	6.3		–		–	10	15	25
	Limit frequency for acceptance equipment = 1 Hz					For $\frac{l_u}{d_0} \leq 60$ and $l_u \leq 4000$ mm			
		–		0.3		35	40	50	60
		0.3		0.6		30	35	40	50
		0.6		1.0		25	30	35	40
		1.0		2.5		20	25	30	35
		2.5		6.3		15	20	25	30
		6.3		–		–	15	20	30
						For $\frac{l_u}{d_0} > 60$ or $l_u > 4000$ mm			
		–		0.3		–	–	–	–
		0.3		0.6		–	–	–	–
		0.6		1.0		–	35	40	45
		1.0		2.5		–	30	35	40
		2.5		6.3		–	25	30	35
		6.3		–		–	20	25	35

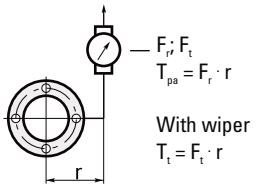

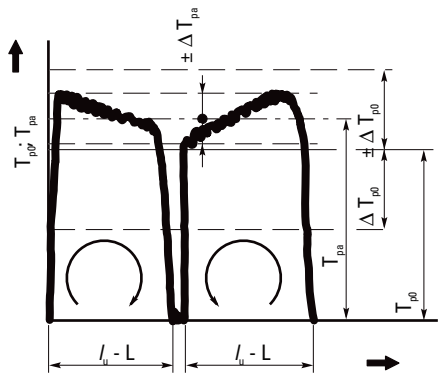

L Nut length
a Actual
p Permissible
0 Nominal
t Total

Materials

Part	Material (comparable)		Strength		Heat treatment
			R_m [N/mm²]	R_e [N/mm²]	
Shaft	Cf53	42CrMo4	≥ 610	≥ 380	60 ± 2 HRC Inductive hardening
Nut	16MnCr5	100Cr6	> 800	> 600	60 ± 2 HRC hardened
Wiper	PPN 7190 TV 40 NBR 33				
Ball	100 Cr 6				64 ± 2 HRC

Special materials and heat or surface treatment on request.

Permitted temperature in continuous operation -30 °C to +100 °C. Please inquire for other applications.

Nuts with plastic ball returns only to +80° C (briefly 110° C)

Fitting the nut

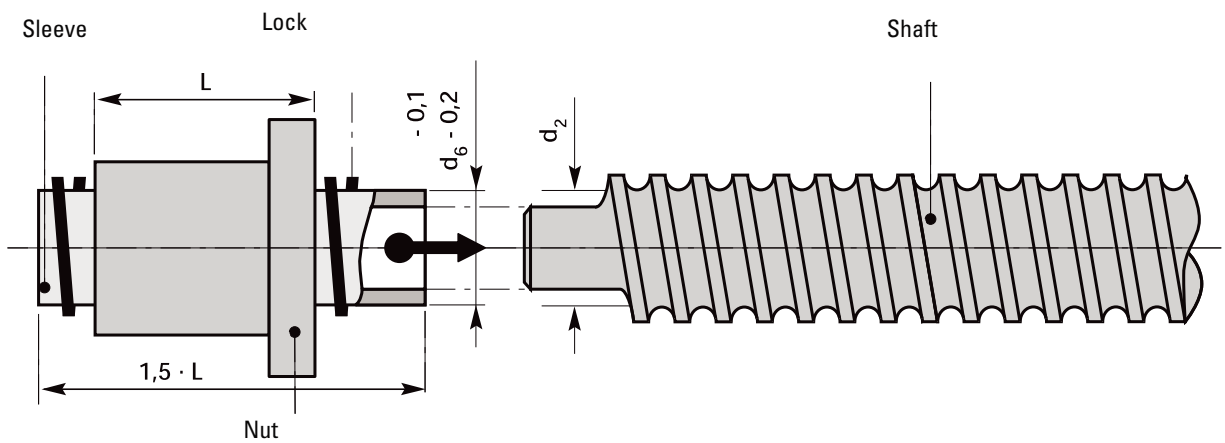

Lubrication

Correct lubrication for ball screws is not only essential in terms of achieving the expected service life, but also has an impact on smooth running properties, heat generation during operation and idling torque.
In principle, the types of oil and grease used for rolling bearings are suitable for this purpose. Unless the customer has specified otherwise, the function acceptance process is performed at Thomson Neff using an oil in accordance with ISO VG100.

Oil lubrication

Generally speaking, CL oils are used in this context for increasing corrosion protection and durability. Alloyed CLP oils with EP additives can also be used. The appropriate level of viscosity depends on the circumferential speed (in other words, diameter and speed) and the ambient or expected operating temperature.
The amount of oil required per ball revolution lies somewhere between 0.3 and 0.5 cm^3/h, depending on the speed. Only 1/10 of this amount is needed if liquid grease is used. For oil bath lubrication, it is enough for the oil level to reach half way up the lowest lying ball if the mounting position is horizontal. Use the diagram below to determine the viscosity level.

Example: KGT63 x 10
Average speed nm = 200 rpm
Operating temperature t = 25°C

For a nominal diameter of 63 mm and n_m= 200 rpm the left part of the diagram shows a viscosity v_1 of 110 mm^2/s. When this value is transferred to the diagram on the right, the point of intersection at a temperature of 25°C lies between ISO VG46 and ISO VG68. In order to ensure there is an adequate lubricating film during all operating states, the higher value should be selected in each case. This would be ISO VG68 in the current case, although even higher levels may be required for longer running times where fatigue may be an issue. The appropriate oils with this viscosity class can be selected from the table of lubricants shown below.

Grease lubrication

Grease can also be used to lubricate ball screws. This approach allows longer intervals between each lubrication.

Given that a small amount of grease escapes from the nut and remains on the shaft with each stroke of the ball screw, even when the wipers are working as well as they can, the amount of grease available reduces during operation. This limits the length of time the ball screw can be used without being regreased. The expected service life L10 can only be achieved if the grease lost is replaced by means of a centralized lubrication system or a lubrication schedule tailored to the application in question.

Manual regreasing can achieve an average of around 700 extra service hours. This figure can vary considerably, however, depending on the machine design and the conditions under which it is used.

Lubricating greases are divided into NLGI classes based on their penetration level in accordance with DIN 51818. Under normal conditions (operating temperatures between -20°C and +120°C), waterproof greases from class K2K-20 in accordance with DIN 51825 should be used for ball screws. Greases from class K1K-20 (very high speeds) or KP2K-20 (very high loads or low speeds) can be used for special applications.

Greases which do not share the same saponification basis should not be mixed. The manufacturer must be consulted if operating temperatures are going to be higher or lower than the values specified. When deciding how much grease to use, look to fill about half of the space available. In order to avoid the ball screws heating up unnecessarily as a result of excess grease, machine designs should ensure that waste or superfluous grease is able to escape.

If you have any additional questions concerning lubrication, please consult our engineering consultants.

Calculation for determining volume when regreasing (using grease)

$$V_{RL} = \frac{d_0 \times P_h \times D_w \times i^{0.7}}{1250}$$

V_{RL} = Regreasing volume [g]
d_0 = Nominal diameter of shaft [mm]
P_h = Lead [mm]
D_w = Diameter of ball [mm]
i = Number of revolutions in nut

When lubricating a dummy nut, multiply the volume calculated by 2.5.

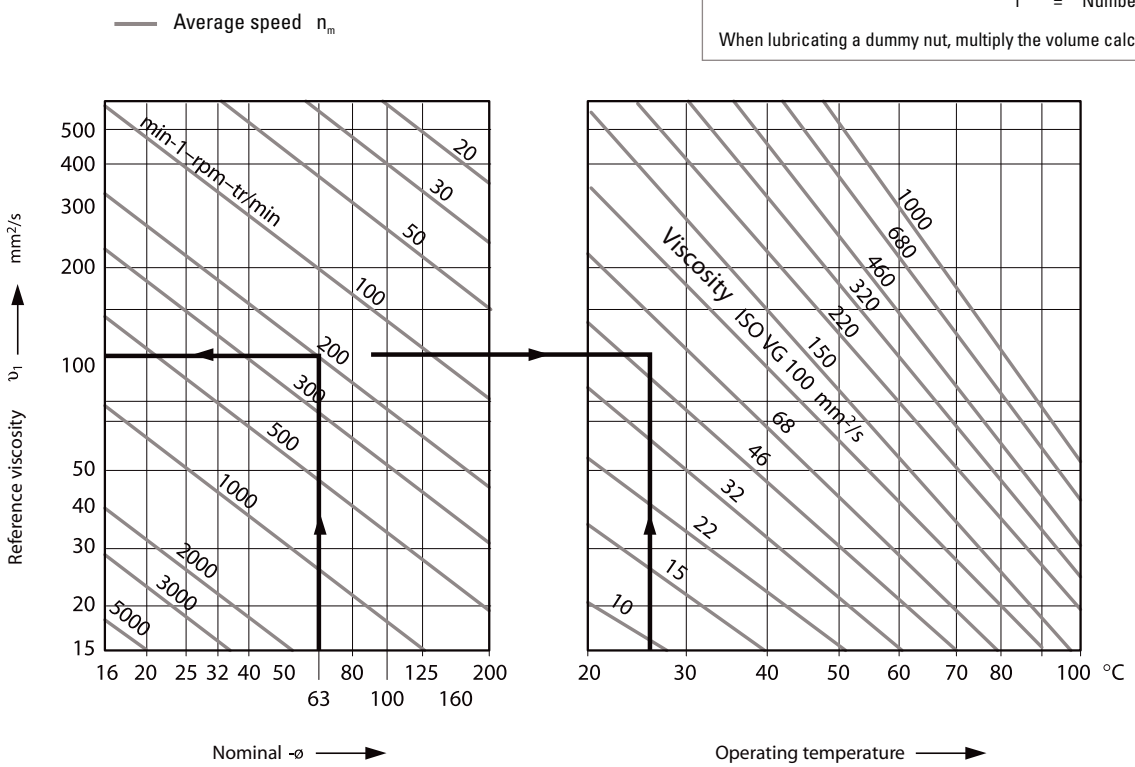

Recommended lubricants

Viscosity class				
ISO	**BP**	**CASTROL**	**ESSO**	**TOTAL FINA**
VG 68	Energol RC 68 Energol HLP-D 68 Energol GR-XP 68 Maccurat 68D*	Hyspin AWS 68 Hyspin SP 68 Vario HDX Alpha SP 68 Alpha MW 68 Magnaglide D 68*	Teresso 68 Spartan EP 68 Febis K 68*	Hydran G 68
VG 100	Energol RC 100 Energol GR-XP 100	Hyspin AWS 100 Hyspin SP 100 Alpha SP 100 Alpha MW 100	Circulating oil 100 Spartan EP 100	Hydran G 100
VG 150	Energol RC 150 Energol GR-XP 150	Alpha SP 150 Alpha MW 150	Nuto 150 Spartan EP 150	Hydran G 150
VG200	Energol CS-HB 220 Energol CR-XP 220 Maccurat 220D*	Alpha SP 220 Alpha MW 220 Magnaglide D 220*	Nuto 220 Spartan EP 220 Febis K 220*	Hydran G 220
Not ISO				
K 1 K 20	Energrease LS 1	Available on request	Beakon EP 1	Marson L 1
K 2 K 20	Energrease LS 2 Multi-purpose grease L 2	Castrol Spheerol AP 2 Castrol product 783/46	Beakon 2 Unirex N 2 EXXON multi-purpose grease	Marson L 2
KP 2 K 20	Energrease LS-EP 2 BP long-life grease	Castrol ALV Castrol product 783/46	Beakon EP 2 Ronex MP-D	Marson EPL 2

Viscosity class		
ISO	**KLÜBER**	**MOBIL**
VG 68	Crucolan 68 Klüberoil GEM1-68	Vactra Oil Heavy Medium Mobilgear 626/Vactra Oil No. 2*
VG 100	Crucolan 100 Klüberoil GEM1-100	Vactra Oil Heavy Mobilgear 627
VG 150	Crucolan 150 Klüberoil GEM1-150	Vactra Oil Extra Heavy Mobilgear 627
VG200	Crucolan 220 Klüberoil GEM1-220	Mobil DTE Oil BB Mobilgear 630 / Vactra Oil No. 4*
Not ISO	Centoplex 1 DL	Mobilith AW1: (not available in Germany)
K 1 K 20	Centoplex 2	Mobilux EP1: (not available in Germany)
K 2 K 20	Centoplex GLP 402	Mobilux 2
KP 2 K 20	Isoflex NBU 15 Staburags NBU 8 EP	Mobilux EP2 Mobilgrease HP 222

Robust and value-for-money

Trapezoidal thread screws are an inexpensive solution for design tasks relating to clamping, positioning and advance motions.

The range complies with DIN 103 and offers a wide selection of nuts made from various materials.

Every shaft can be supplied with customized end journals.

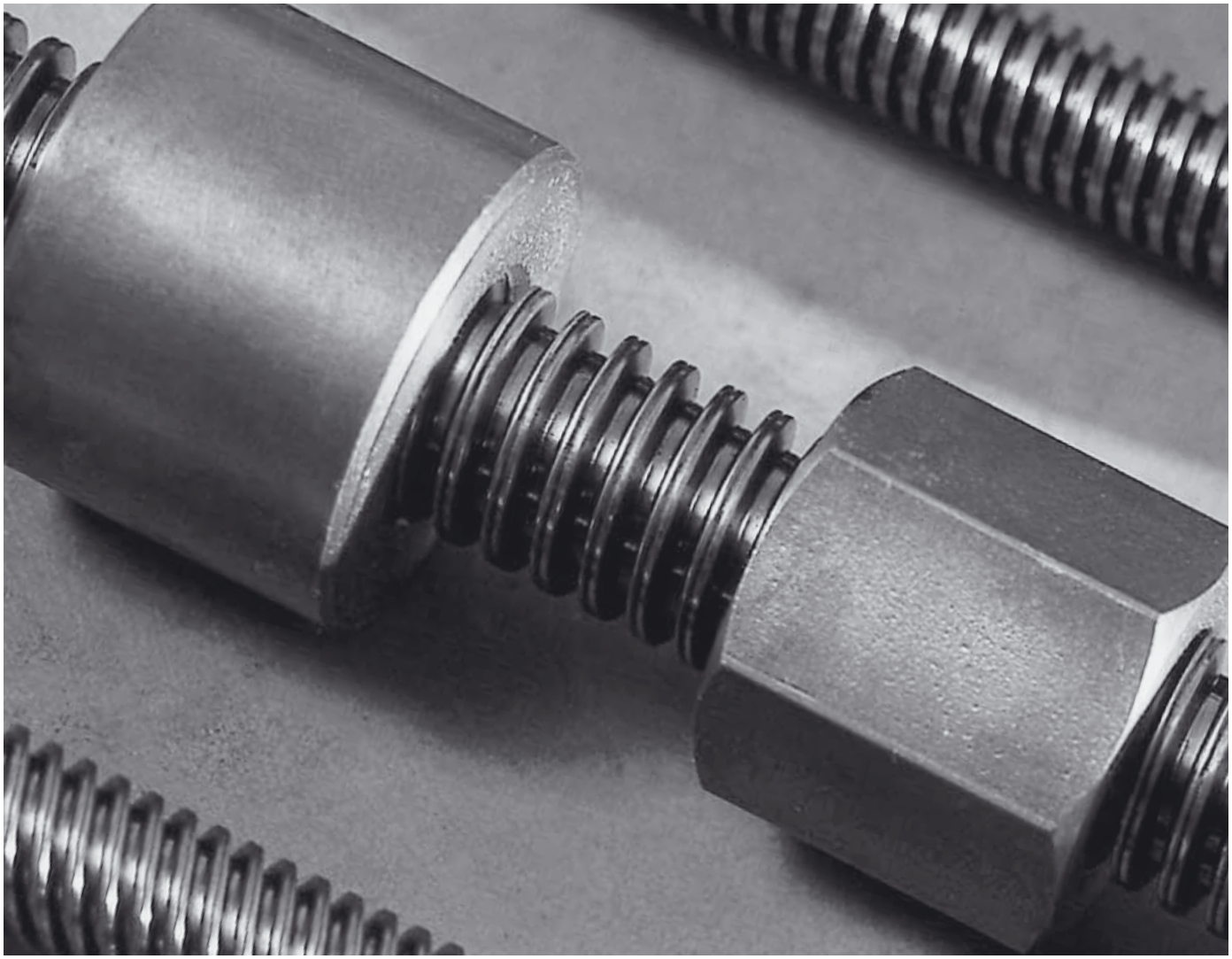

General technical data for trapezoidal thread screws

THOMSON NEFF trapezoidal-thread screws are manufactured in a rolled design. See separate THOMSON NEFF catalog for other dimensions and coarse thread (V2A version).

RPTS precision trapezoidal thread screw

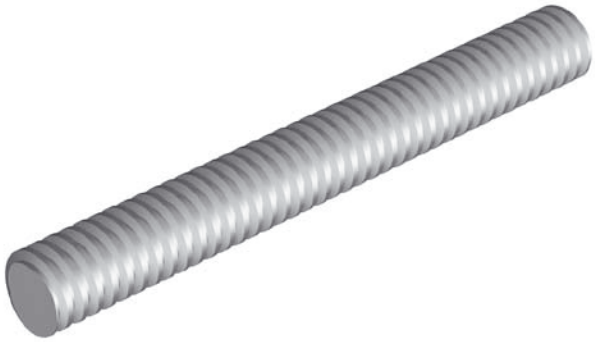

Technical data

■ Thread:	Metric ISO trapezoidal thread complying with DIN 103
■ Diameter:	10 – 80 mm
■ Lead:	2 – 24 mm
■ Number of starts:	up to 6 threads
■ Direction of rotation:	right-hand thread, single-start also available as left-hand thread, see table on page 63
■ Length:	up to 3000 mm to Tr 18 x 4 up to 6000 mm from Tr 20 x 4
■ Material:	1.0401 (case-hardened steel C15) low-stress annealed, weldable
■ Precision:	50 – 300 µm/300 mm
■ Straightness:	0.1 – 0.5 mm/300 mm
■ Right-hand/left-hand shaft:	for leads of 2 – 10 mm
■ End journal:	as customer requirement

Trapezoidal-thread screw in right-hand and left-hand thread

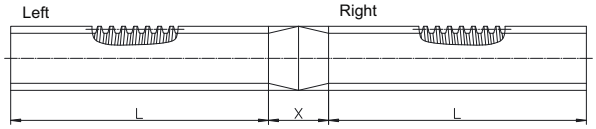

Technical data

■ Diameter:	10 – 80 mm
■ Lead:	2 – 10 mm
■ Number of starts:	single-start
■ Direction of rotation:	right-hand thread and left-hand thread
■ Length:	maximum 3000 mm, from Tr 20x4 up to 6000 mm on request
■ Material:	1.0401 (C15)
■ Precision:	50 – 300 µm/300 mm
■ Straightness:	0.1 – 0.5 mm/300 mm
■ Dimension X:	100 mm Diameter in area of dimension X is smaller than the nominal diameter

RPTS trapezoidal-thread screws

RPTS rolled precision trapezoidal thread screw

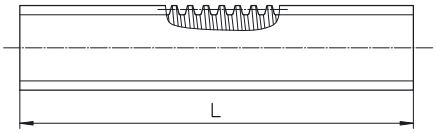

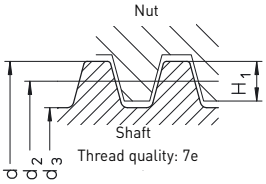

Manufacturing length 3000 mm, available up to 6000 mm length in diameters of 20 mm and greater. Dimension L as customer requirement.

Material: 1.0401 (C15).

Style External diameter [mm] Lead [mm] right-hand/left-hand	d	Dimension [mm] $d_{2\,min}$	$d_{2\,max}$	d_3 [1]	H_1	Precision [µm/ 300 mm]	Straight-ness [mm/ 300 mm]	α [2]	η [3]	Distributed load [kg/m]	Geometrical moment of inertia [cm^4]	Section modulus [4] [cm^3]	Mass moment of inertia [kg m^2/m]
RPTS Tr 10x2	10	8.739	8.929	6.89	1	300	0.5	4° 2′	0.40	0.500	0.011	0.032	$0.51 \cdot 10^{-5}$
RPTS Tr 10x3		8.191	8.415	5.84	1.5	300	0.5	6° 24′	0.51	0.446	0.0057	0.020	$0.40 \cdot 10^{-5}$
RPTS Tr 12x3	12	10.191	10.415	7.84	1.5	300	0.5	5° 11′	0.46	0.68	0.019	0.047	$0.94 \cdot 10^{-5}$
RPTS Tr 12x6 P3 [5]	12	10.165	10.415	7.84	1.5	300	0.5	10° 18′	0.62	0.68	0.019	0.047	$0.94 \cdot 10^{-5}$
RPTS Tr 14x3	14	12.191	12.415	9.84	1.5	300	0.5	4° 22′	0.42	0.96	0.046	0.094	$1.88 \cdot 15^{-5}$
RPTS Tr 14x4		11.640	11.905	8.80	2	300	0.5	6° 3′	0.50	0.888	0.029	0.067	$1.60 \cdot 10^{-5}$
RPTS Tr 16x2	16	14.729	14.929	12.89	1	50	0.1	2° 36′	0.28	1.39	0.136	0.210	$3.90 \cdot 10^{-5}$
RPTS Tr 16x4	16	13.640	13.905	10.80	2	50	0.1	5° 11′	0.46	1.21	0.067	0.124	$2.96 \cdot 10^{-5}$
RPTS Tr 16x8 P4 [5]	16	13.608	13.905	10.80	2	300	0.3	10° 18′	0.62	1.21	0.067	0.124	$2.96 \cdot 10^{-5}$
RPTS Tr 18x4	18	15.640	15.905	12.80	2	50	0.1	4° 32′	0.43	1.58	0.132	0.206	$5.05 \cdot 10^{-5}$
RPTS Tr 20x4	20	17.640	17.905	14.80	2	50	0.1	4° 2′	0.40	2.00	0.236	0.318	$8.10 \cdot 10^{-5}$
RPTS Tr 20x8 P4 [5]		17.608	17.905	14.80	2	200	0.2	8° 3′	0.57	2.00	0.236	0.318	$8.10 \cdot 10^{-5}$
RPTS Tr 20x16 P4 [5]		17.608	17.905	14.80	2	200	0.2	15° 47′	0.71	2.00	0.236	0.318	$8.10 \cdot 10^{-5}$
RPTS Tr 22x5	22	19.114	19.394	15.50	2.5	50	0.1	4° 39′	0.43	2.34	0.283	0.366	$1.11 \cdot 10^{-4}$
RPTS Tr 22x24 P4 S [5][6]		19.140	19.505	16.50	2.5	200	0.2	21° 34′	0.75	2.34	0.364	0.441	$1.11 \cdot 10^{-4}$
RPTS Tr 24x5	24	21.094	21.394	17.50	2.5	50	0.1	4° 14′	0.41	2.85	0.460	0.526	$1.65 \cdot 10^{-4}$
RPTS Tr 24x10 P5 [5]		21.058	21.394	17.50	2.5	200	0.2	8° 25′	0.58	2.85	0.460	0.526	$1.65 \cdot 10^{-4}$
RPTS Tr 26x5	26	23.094	23.394	19.50	2.5	50	0.1	3° 52′	0.39	3.40	0.710	0.728	$2.35 \cdot 10^{-4}$
RPTS Tr 28x5	28	25.094	25.394	21.50	2.5	50	0.1	3° 34′	0.37	4.01	1.050	0.976	$3.26 \cdot 10^{-4}$
RPTS Tr 30x6	30	26.547	26.882	21.90	3	50	0.1	4° 2′	0.40	4.50	1.130	1.030	$4.10 \cdot 10^{-4}$
RPTS Tr 30x12 P6 [5]		26.507	26.882	21.90	3	200	0.2	8° 3′	0.57	4.50	1.130	1.030	$4.10 \cdot 10^{-4}$
RPTS Tr 32x6	32	28.547	28.882	23.90	3	50	0.1	3° 46′	0.38	5.19	1.600	1.340	$5.45 \cdot 10^{-4}$
RPTS Tr 36x6	36	32.547	32.882	27.90	3	50	0.1	3° 18′	0.35	6.71	2.970	2.130	$9.10 \cdot 10^{-4}$
RPTS Tr 40x7	40	36.020	36.375	30.50	3.5	50	0.1	3° 29′	0.37	8.21	4.250	2.790	$1.37 \cdot 10^{-3}$
RPTS Tr 40x14 P7 [5]		35.978	36.375	30.50	3.5	200	0.2	6° 57′	0.53	8.21	4.250	2.790	$1.37 \cdot 10^{-3}$
RPTS Tr 44x7	44	40.020	40.275	34.50	3.5	50	0.1	3° 8′	0.34	10.10	6.950	4.030	$2.10 \cdot 10^{-3}$
RPTS Tr 48x8	48	43.468	43.868	37.80	4	100	0.1	3° 18′	0.35	12.00	10.000	5.300	$2.90 \cdot 10^{-3}$
RPTS Tr 50x8	50	45.468	45.868	39.30	4	100	0.1	3° 10′	0.34	13.10	11.700	5.960	$3.40 \cdot 10^{-3}$
RPTS Tr 60x9	60	54.935	55.360	48.15	4.5	200	0.3	2° 57′	0.33	19.00	26.400	11.000	$7.30 \cdot 10^{-3}$
RPTS Tr 70x10	70	64.425	64.850	57.00	5	200	0.3	2° 48′	0.32	26.00	51.800	18.200	$1.40 \cdot 10^{-2}$
RPTS Tr 80x10	80	74.425	74.850	67.00	5	200	0.3	2° 25′	0.29	34.70	98.900	29.500	$2.40 \cdot 10^{-2}$

[1] In a deviation from DIN 103 the minor diameter is slightly smaller for greater root rounding.
[2] Pitch angle at the pitch diameter; ➔ formula (XVI) p. 80.
[3] Theoretical efficiency for the transformation of a rotary motion into an axial motion at coefficient of friction µ = 0.1.
Efficiency for other coefficients of friction ; ➔ formula (XVI) p. 80.
[4] The polar resistance moment is twice as great as the resistance moment.
[5] Right-hand thread only.
[6] Special profile.

Trapezoidal thread nuts

Trapezoidal thread nuts complying with DIN 103, tolerance class 7H.

In principle, chased versions of nuts with Ø 18 mm and above are available for all screws.

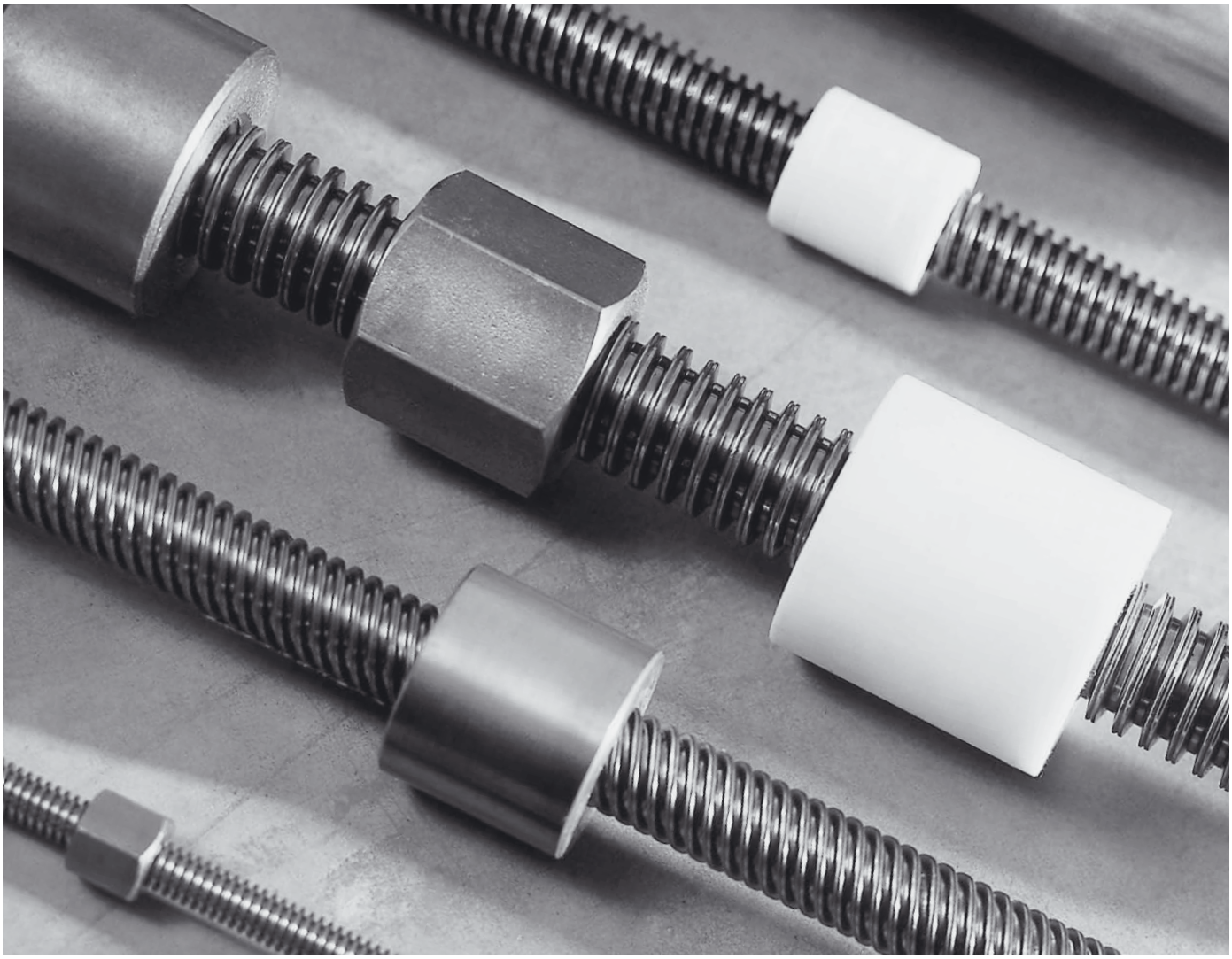

Trapezoidal thread nuts

KSM short cylindrical steel nut blank

Suitable for clamping, adjustment movements in manual operation and as a fixing nut. Not suited for motion systems as the steel-steel sliding pairing has a tendency to scuffing.

Further processing: The thread may be used as a reference for precise instructions on use and installation.

Material: Free-cutting steel 1.0718 (9 SMn 28K).

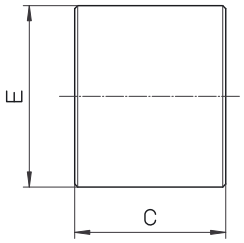

Style	E [mm]	C [mm]	Mass [kg]
KSM Tr 10x2	22	15	0.037
KSM Tr 10x3	22	15	0.036
KSM Tr 12x3	26	18	0.064
KSM Tr 14x3	30	21	0.96
KSM Tr 14x4	30	21	0.96
KSM Tr 16x4	36	24	0.16
KSM Tr 18x4	40	27	0.22
KSM Tr 20x4	45	30	0.31
KSM Tr 22x5	45	33	0.33
KSM Tr 24x5	50	36	0.45
KSM Tr 26x5	50	39	0.47
KSM Tr 28x5	60	42	0.76
KSM Tr 30x6	60	45	0.79
KSM Tr 32x6	60	48	0.81
KSM Tr 36x6	75	54	1.5
KSM Tr 40x7	80	60	1.9
KSM Tr 44x7	80	66	2.7
KSM Tr 48x8	90	72	2.9
KSM Tr 50x8	90	75	2.7
KSM Tr 60x9	100	90	3.7
KSM Tr 70x10	110	105	4.9
KSM Tr 80x10	120	120	6.4

SKM hexagonal steel nut

For clamping, adjustment movements in manual operation and as a fixing nut. Not suited for motion systems as the steel-steel sliding pairing has a tendency to scuffing.

Further processing: The thread may be used as a reference for precise instructions on use and installation.

Material: Free-cutting steel 1.0718 (9 SMn 28K).

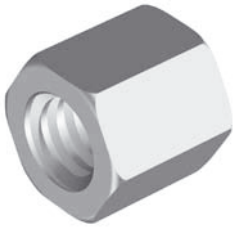

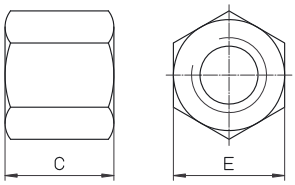

Style	E [mm]	C [mm]	Mass [kg]
SKM Tr 10x2	17	15	0.022
SKM Tr 10x3	17	15	0.022
SKM Tr 12x3	19	18	0.028
SKM Tr 14x3	22	21	0.044
SKM Tr 14x4	22	21	0.044
SKM Tr 16x4	27	24	0.084
SKM Tr 18x4	27	27	0.086
SKM Tr 20x4	30	30	0.17
SKM Tr 22x5	30	33	0.17
SKM Tr 24x5	36	36	0.20
SKM Tr 26x5	36	39	0.20
SKM Tr 28x5	41	42	0.30
SKM Tr 30x6	46	45	0.43
SKM Tr 32x6	46	48	0.42
SKM Tr 36x6	55	54	0.73
SKM Tr 40x7	65	60	1.3
SKM Tr 44x7	65	66	1.2
SKM Tr 48x8	75	72	1.8
SKM Tr 50x8	75	75	1.8
SKM Tr 60x9	90	90	2.8
SKM Tr 70x10	90	105	3.1

Trapezoidal thread nuts

LRM long cylindrical gunmetal nut

For motion systems in continuous operation with particularly favorable wear characteristics. Suitable as safety nut.

Further processing: The thread may be used as a reference for precise instructions on use and installation.

Material: 2.1090 (G-CuSn 7Zn Pb (Rg7)), characteristics ➔ page 68.

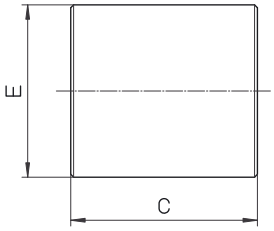

Style	E [mm]	C [mm]	Mass [kg]	Bearing length ratio [mm²]
LRM Tr 10x2	22	20	0.056	200
LRM Tr 10x3	22	20	0.056	190
LRM Tr 12x3	26	24	0.092	280
LRM Tr 12x6 P3[1)]	26	24	0.092	280
LRM Tr 14x3	30	28	0.14	380
LRM Tr 14x4	30	28	0.14	370
LRM Tr 16x2	36	32	0.25	490
LRM Tr 16x4	36	32	0.25	490
LRM Tr 16x8 P4[1)]	36	32	0.25	490
LRM Tr 18x4	40	36	0.34	630
LRM Tr 20x4	45	40	0.48	790
LRM Tr 20x8 P4[1)]	45	40	0.45	790
LRM Tr 22x5	45	40	0.46	850
LRM Tr 22x24 P4S[1) 2)]	45	40	0.46	880
LRM Tr 24x5	50	48	0.69	1130
LRM Tr 24x10 P5[1)]	50	48	0.65	1130
LRM Tr 26x5	50	48	0.58	1240
LRM Tr 28x5	60	60	1.2	1680
LRM Tr 30x6	60	60	1.2	1780
LRM Tr 30x12 P6[1)]	60	60	1.2	1780
LRM Tr 32x6	60	60	1.2	1910
LRM Tr 36x6	75	72	2.2	2610
LRM Tr 40x7	80	80	2.8	3210
LRM Tr 40x14 P7[1)]	80	80	2.8	3210
LRM Tr 44x7	80	80	2.6	3560
LRM Tr 48x8	90	100	4.3	4840
LRM Tr 50x8	90	100	4.2	5060
LRM Tr 60x9	100	120	5.7	7320
LRM Tr 70x10	110	140	7.6	10000
LRM Tr 80x10	120	160	9.7	13200

[1)] Right-hand thread only.
[2)] Special profile; nominal diameter 21.5.

Trapezoidal thread nuts

EFM complete bronze nut

For motion systems in continuous operation with particularly favorable wear characteristics. Suitable as safety nut.

EFM can be fitted with the KON and KAR adapters (➔ pages 69–70).

Material: 2.1090 (G-CuSn 7Zn Pb (Rg7)), characteristics ➔ page 68.

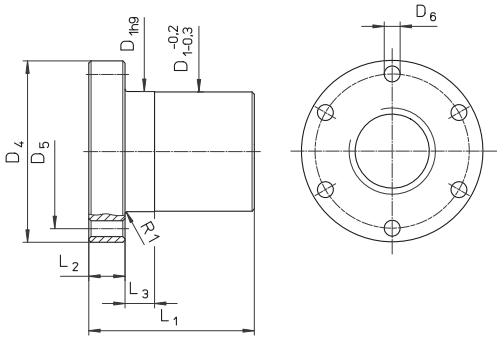

Style	Dimensions [mm]							Mass [kg]	Bearing length ratio [mm²]
	D_1	D_4	D_5	$6xD_6$	L_1	L_2	L_3		
EFM Tr 16x4	28	48	38	6	44	12	8	0.25	670
EFM Tr 18x4	28	48	38	6	44	12	8	0.25	770
EFM Tr 20x4	32	55	45	7	44	12	8	0.30	870
EFM Tr 24x5	32	55	45	7	44	12	8	0.30	1040
EFM Tr 30x6	38	62	50	7	46	14	8	0.40	1370
EFM Tr 36x6	45	70	58	7	59	16	10	0.60	2140
EFM Tr 40x7	63	95	78	9	73	16	10	1.70	2930
EFM Tr 50x8	72	110	90	11	97	18	10	2.60	4900
EFM Tr 60x9	85	125	105	11	99	20	10	3.70	6040
EFM Tr 70x10	95	180	140	17	100	30	16	7.80	8250
EFM Tr 80x10	105	190	150	17	110	30	16	8.90	10890

LKM long cylindrical plastic nut

For low-noise motion systems with higher speeds and longer duty times. Especially recommended in combination with rolled trapezoidal lead screws. Good emergency running characteristics

Material: PETP, characteristics ➔ page 68.

Lubrication: FUCHS LUBRITEC,
URETHYN EM 1 synthetic oil-based semi-fluid transmission grease

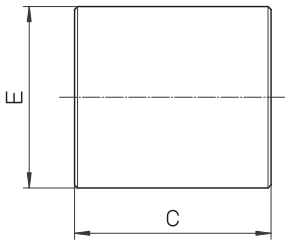

Style	E [mm]	C [mm]	Mass [kg]	Bearing length ratio [mm2]
LKM Tr 12x3	26	24	0.012	280
LKM Tr 12x6 P3	26	24	0.012	280
LKM Tr 16x4	36	32	0.032	490
LKM Tr 16x8 P4	36	32	0.032	490
LKM Tr 20x4	45	40	0.06	790
LKM Tr 20x8 P4	45	40	0.06	790
LKM Tr 24x5	50	48	0.088	1130
LKM Tr 30x6	60	60	0.15	1780
LKM Tr 30x12 P6	60	60	0.15	1780
LKM Tr 36x6	75	72	0.30	2610
LKM Tr 40x7	80	80	0.37	3210
LKM Tr 50x8	90	100	0.55	5060

Right-hand thread only, left-hand thread on request.

Trapezoidal thread nuts

EKM complete plastic nuts

For low-noise motion systems with higher speeds and longer duty times under moderate load. Good emergency running characteristics. Especially recommended in combination with rolled trapezoidal lead screws.

Material: PETP, see below for characteristics.

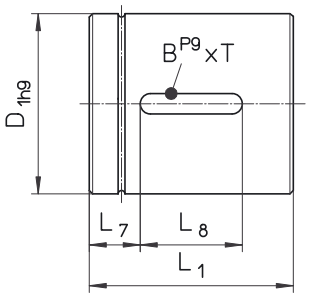

Style	Dimensions [mm]					Mass [kg/each	Bearing length ratio [mm2]
	ø D_1	L_1	L_7	L_8	WxD		
KON Tr 16x4	28	34	7	20	5x2.9	0.02	520
KON Tr 20x4	32	34	7	20	5x2.9	0.03	670
KON Tr 20x8P4	32	34	7	20	5x2.9	0.03	670
EKM Tr 20x16 P4	32	34	7	20	5x2.9	0.03	670

EKM with left-hand thread on request.

Material properties

Material 2.1090

- 0.2 % yield point $R\rho_{0.2}$: 120 N/mm^2
- Tensile strength R_m (δB): 240 N/mm^2
- Elongation at fracture A5 min.: 15 %
- Brinell hardness HB 10/1000: 65
- Density: 8.8 kg/dm^3
- Modulus of elasticity: 90000 N/mm^3
- pv factor: 300 N/mm^2 · m/min

Material PETP

- Tensile strength: 80 N/mm^2
- Modulus of elasticity: 2800 – 3000 N/mm^2
- Impact strength: 40 kJm^2
- Notched bar impact strength: 4 kJm^2
- Thermal expansion: 8,5 · 10-5/°C
- Water absorption: 0.25 %
- Water saturation: 0.6 %
- Density: 1.38 kg/dm^3
- Friction against steel: 0.05 – 0.08
- Ball indentation hardness H 358/30: 150 N/mm^2
- Elongation at yield stress of 80 N/mm^2: 4 – 5 %
- pv factor: 100 N/mm^2 · m/min
- Maximum pressure per unit area: 10 N/mm^2
- Maximum sliding speed: 120 m/min

KON adapter support

Adapter support for radial fastening of EFM trapezoidal thread flanged nut.

Material: 1.0065 (St37) or 1.0507 (St52).

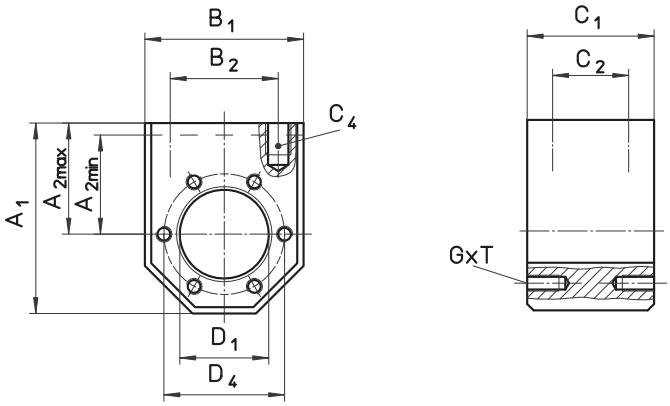

Style for EFM	Dimensions [mm]										
	A_1	$A_{2\,max}$ [1)]	$A_{2\,min}$	B_1	B_2	C_1	C_2	C_4	D_1	D_4	Th x D
KON Tr 16x4/Tr 18x4	60	35	25	50	34	40	24	M 8x15	28	38	M 5x10
KON Tr 20x4/Tr 24x5	68	37.5	29	58	39	40	24	M 8x15	32	45	M 6x12
KON Tr 30x6	75	42.5	32.5	65	49	40	24	M 10x15	38	50	M 6x12
KON Tr 36x6	82	45	37	75	54	50	30	M 10x12	45	58	M 6x12
KON Tr 40x7	120	70	50	100	76	65	41	M 14x25	63	78	M 8x14
KON Tr 50x8	135	77.5	57.5	115	91	88	64	M 16x25	72	90	M 10x16
KON Tr 60x9	152	87.5	65	130	101	88	64	M 16x30	85	105	M 10x16

[1)] Standard = $A_{2\,max}$ (as delivered)

KAR universal joint adapter

Universal joint adapter for universally mounting on EFM trapezoidal thread flanged nut.

Material: 1.0065 (St37) or 1.0507 (St52).

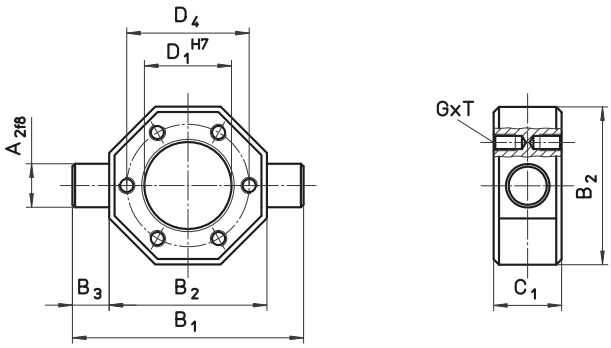

Style for EFM	Dimensions [mm]							
	A_2	B_1	B_2	B_3	C_1	D_1	D_4	Th x D
KAR Tr 16x4/Tr 18x4	12	70	50	10	20	28	38	M 5x10
KAR Tr 20x4/Tr 24x5	16	85	58	13.5	25	32	45	M 6x12
KAR Tr 30x6	18	95	65	15	25	38	50	M 6x12
KAR Tr 36x6	20	110	75	17.5	30	45	58	M 6x12
KAR Tr 40x7	30	140	100	20	40	63	78	M 8x14
KAR Tr 50x8	40	165	115	25	50	72	90	M 10x16
KAR Tr 60x9	40	180	130	25	50	85	105	M 10x16

End journals for loose bearings/fixed bearings
Form D, F

The type of bearing selected influences the stiffness of the lead screw system as a whole and also the rotational vibration and buckling behavior of the lead screw shaft. The required end journals are made for the trapezoidal lead screw according to the various types of bearing.

Note: Bearings are not supplied.

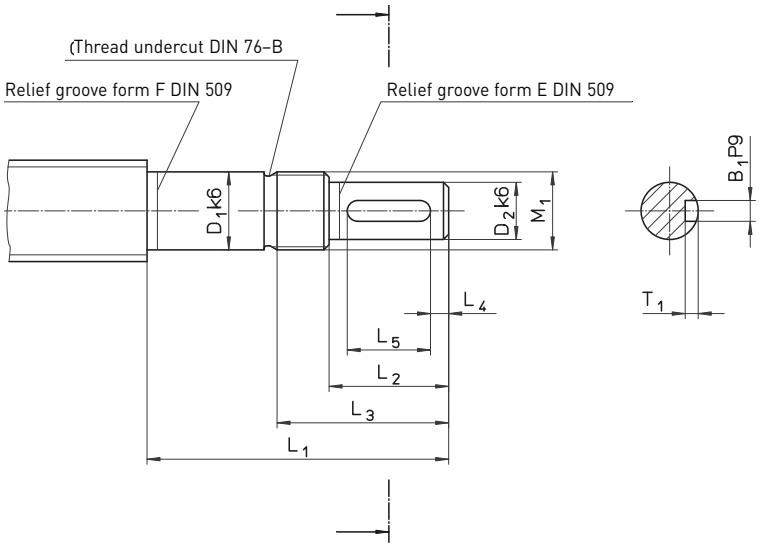

Form D	Dimensions [mm]									Bearing
TGT	D_1	D_2	L_1	L_2	L_3	L_4	L_5	M_1	W_1xD_1	ZKLF…2RS
Tr 18/20/22x…	12	9	55	20	32	2.5	16	M 12x1	3x1.8	1255
Tr 24/26x…	15	11	58	23	35	3.5	16	M 15x1	4x2.5	1560
Tr 28/30/32x…	20	14	70	30	44	4	22	M 20x1	5x3	2068
Tr 36x…	25	19	82	40	57	6	28	M 25x1.5	6x3.5	2575
Tr 40/44/48/50x…	30	24	92	50	67	7	36	M 30x1.5	8x4	3080

Form F	Dimensions [mm]									Bearing
TGT	D_1	D_2	L_1	L_2	L_3	L_4	L_5	M_1	W_1xD_1	ZARN...LTN
Tr 22/24/26x…	15	11	73	23	35	3.5	16	M 15x1	4x2.5	1545
Tr 28/30/32x…	20	14	88	30	45	4	22	M 20x1	5x3	2052
Tr 28/30/32x…	20	14	107	30	50	4	22	M 20x1	5x3	2062
Tr 36/40/44x…	25	19	105	40	58	6	28	M 25x1.5	6x3.5	2557
Tr 36/40/44x…	25	19	120	40	63	6	28	M 25x1.5	6x3.5	2572
Tr 48/50x…	35	28	145	60	82	10	40	M 35x1.5	8x4	3585
Tr 60/70x…	40	36	175	80	103	8.5	63	M 40x1.5	10x5	4090
Tr 80x…	55	48	215	110	136	10	90	M 55x2	14x5.5	55115

End journals for loose bearings/fixed bearings
Form H, J, L, Z

Form H	Dimensions [mm]									Bearing
TGT	D_1	D_2	L_1	L_2	L_3	L_4	L_5	M_1	W_1xD_1	ZARF...LTN
Tr 22/24/26x…	15	11	85	23	35	3.5	16	M 15x1	4x2.5	1560
Tr 28/30/32x…	20	14	102	30	44	4	22	M 20x1	5x3	2068
Tr 28/30/32x…	20	14	122	30	49	4	22	M 20x1	5x3	2080
Tr 36/40/44x…	25	19	120	40	57	6	28	M 25x1.5	6x3.5	2575
Tr 36/40/44x…	25	19	135	40	63	6	28	M 25x1.5	6x3.5	2590
Tr 48/50x…	35	28	160	60	81	10	40	M 35x1.5	8x4	35110
Tr 60/70x…	40	36	195	80	105	8.5	63	M 40x1.5	10x5	40115
Tr 80x…	55	48	235	110	135	10	90	M 55x2	14x5.5	55145

Form J	Dimensions [mm]									Bearing
TGT	D_1	D_2	L_1	L_2	L_3	L_4	L_5	M_1	W_1xD_1	FDX
Tr 20/22x…	12	9	88	20	32	2.5	16	M 12x1	3x1.8	12
Tr 24/26x…	15	11	92	23	35	3.5	16	M 15x1	4x2.5	15
Tr 28/30/32x…	20	14	107	30	44	4	22	M 20x1	5x3	20
Tr 36/40/44x…	25	19	122	40	57	6	28	M 25x1.5	6x3.5	25
Tr 48/50x…	30	24	136	50	72	7	36	M 30x1.5	8x4	30
Tr 60x…	40	36	182	80	102	8.5	63	M 40x1.5	10x5	40

Form L	Dimensions [mm]									
TGT	D_1	D_2	L_1	L_2	L_3	L_4	L_5	M_1	W_1xD_1	Bearing
Tr 16/18x…	10	8	55	20	30	–	–	M 10x0.75	–	7200 BE RS
Tr 20/22x…	12	9	58	20	30	2.5	16	M 12x1	3x1.8	7201 BE RS
Tr 24/26x…	15	11	73	23	33	3.5	16	M 15x1	4x2.5	7202 BE RS
Tr 28/30/32x…	20	14	88	30	43	4	22	M 20x1	5x3	7204 BE RS
Tr 36/40/44x…	25	19	120	40	55	6	28	M 25x1.5	6x3.5	7205 BE RS
Tr 48/50x…	35	28	145	60	77	10	40	M 35x1.5	8x4	7207 BE RS
Tr 60x…	40	36	175	80	103	8.5	63	M 40x1.5	10x5	7208 BE RS
Tr 70/80x…	55	48	215	110	133	10	90	M 55x2	14x5.5	7211 BE RS

Form Z
Chamfer 2 x 45°: TGS of ø 12 – 25 mm
Chamfer 3 x 45°: TGS of ø 26 – 40 mm
Chamfer 4 x 45°: TGS of ø 44 – 50 mm

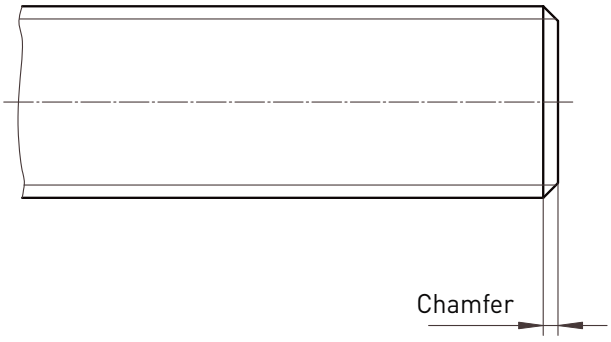

End journals for loose bearings/fixed bearings
Form S, T, W, K

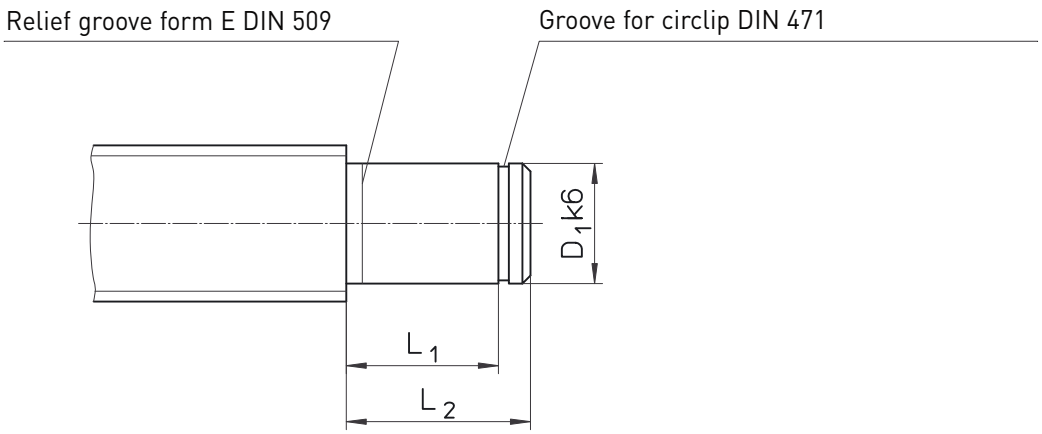

Form S	Dimensions [mm]				
TGT	D_1	L_1	L_2	Spacer bushing	Bearing
Tr 18/20x…	12	40	45	18x12.1x24	6001 RS
Tr 22/24/26x…	15	46	51	21x15.1x28	6002 RS
Tr 28/30/32x…	20	53	58	27x20.1x29	6004 RS
Tr 36x…	25	53	58	32x25.1x23	6205 RS
Tr 40/44/48/50x…	30	60	68	40x30.1x28	6206 RS
Tr 60x…	40	80	88	50x40.1x44	6208 RS
Tr 70/80x…	55	102	110	65x55.1x60	6211 RS

Form T	Dimensions [mm]				
TGT	D_1	L_1	L_2	Inner ring	Needle bearings
Tr 18/20x…	12	40	45	2 IR 12x16x20	HK 1614 RS
Tr 22/24/26x…	15	46	51	2 IR 15x20x23	HK 2018 RS
Tr 28/30/32x…	20	53	58	2 LR 20x25x26.5	HK 2518 RS
Tr 36x…	25	53	58	2 LR 25x30x26.5	HK 3018 RS
Tr 40/44/48/50x…	30	60	68	2 LR 30x35x30	HK 3518 RS
Tr 60x…	40	80	88	4 LR 40x45x20	HK 4518 RS

Form K: Special manufacture, in accordance with customer drawing.

Form W	Dimensions [mm]			
TGT	D_1	L_1	L_2	Bearing
Tr 14/16x…	10	8	12	6000 RS
Tr 18/20x…	12	8	12	6001 RS
Tr 22/24/26x…	15	9	13	6002 RS
Tr 28/30/32x…	20	12	16	6004 RS
Tr 36x…	25	15	20	6205 RS
Tr 40/44/48/50x…	30	16	21	6206 RS
Tr 60x…	40	18	25	6208 RS
Tr 70/80x…	55	21	29	6211 RS

Calculation

Load capacity of trapezoidal thread screws
The load capacity of sliding pairs is generally dependent on their material and surface properties, running in status, pressure per unit area, lubrication ratio, the sliding speed and the temperature and thus from the duty time and the options for heat dissipation.

The permissible pressure per unit area is primarily dependent on the sliding speed of the lead screw.

The pressure per unit area for motion systems should not exceed the value of 5 N/mm^2.

The permissible speed can be calculated from the bearing length ratio of the nut (see tables on pages 66–68) and the pv factor of the nut material concerned (see page 68).

pv factors Material	pv factors [N/mm^2 · m/min]
G-CuSn 7 ZnPb (Rg 7)	300
G-CuSn 12 (G Bz 12)	400
Plastic (PETP)	100
Cast iron GG 22/GG 25	200

Required bearing length ratio

(VIII)

$$A_{erf} = \frac{F_{ax}}{P_p}$$

A_{erf} Required bearing length ratio [mm^2]
F_{ax} Axial load acting [N]
P_p Maximum permissible pressure per unit area = 5 N/mm^2

Maximum permissible sliding speed

(IX)

$$v_{Gp} = \frac{pv - Wert}{P_p}$$

pv factor See table
v_{Gp} Maximum permissible sliding speed [m/min]

Maximum permissible speed

(X)

$$n_p = \frac{v_{Gp} \cdot 1000}{D \cdot \pi}$$

D Pitch diameter [mm]
n_p Maximum permissible speed [rpm]

Permissible advance speed

(XI)

$$s_p = \frac{n_p \cdot P}{1000}$$

P Thread pitch [mm]
s_p Permissible advance speed [m/min]

Calculation

Example calculation for load capacity

Given: Lead screw,
trapezoidal-thread screw with bronze nut P_p = 5 N/mm², axial load F_{ax} = 10000 N

Sought: What travel speed is still permissible at this loading?

Required bearing length ratio A_{erf}

from (VIII)

$$A_{erf} = \frac{F_{ax}}{P_p} = \frac{10000\,N}{5\,N/mm^2} = 2000\,mm^2$$

Selection of the bronze nut from the technical data
➔ page 39

36 x 6 with bearing length ratio A = 2140 mm²

Thread pitch P = 6 mm
Pitch circle diameter D = $d - \frac{P}{2}$
= $36 - \frac{6}{2}$ [mm]
= 33 mm

Maximum permissible sliding speed V_{Gp}

from (IX)

$$v_{Gp} = \frac{pv - Wert}{P_p} = \frac{300\,N/mm^2 \cdot m/min}{5\,N/mm^2} = 60\ m/min$$

With pv factor for Rg 7 = 300 m/min (see table)

Maximum permissible speed

from (X)

$$n_p = \frac{v_{Gp} \cdot 1000}{D \cdot \pi} = \frac{60\,m/min \cdot 1000\,mm/m}{33\,mm \cdot \pi} = 579\ 1/min$$

Permissible advance speed

from (XI)

$$s_p = \frac{n_p \cdot P}{1000} = \frac{579\ 1/min \cdot 6\,mm}{1000\,mm/m} = 3{,}474\ m/min$$

Result:

Under a loading of 10000 N, the selected trapezoidal thread lead screw can be operated with an advance speed of 3.474 m/min.

Calculation

Critical speed of trapezoidal thread screws
There is a risk of resonance bending vibration in slender rotating components such as shafts. The method described below permits the estimation of the resonant frequency on the assumption of an adequately rigid installation. Speeds close to the critical speed furthermore considerably increase the risk of lateral buckling. The critical speed must, therefore, also be viewed in conjunction with the critical buckling force.

Maximum permissible shaft speed

(XII) $$n_p = 0{,}8 \cdot n_{cr} \cdot f_{cr}$$

n_p Maximum permissible shaft speed [rpm]
n_{cr} Theoretical critical shaft speed [rpm], leading to resonance vibrations ➔ see graph
f_{cr} Correction factor taking into consideration the type of shaft bearing ➔ see table

! The operating speed may not be more than 80 % of the maximum speed

Theoretical critical speed n_{cr}

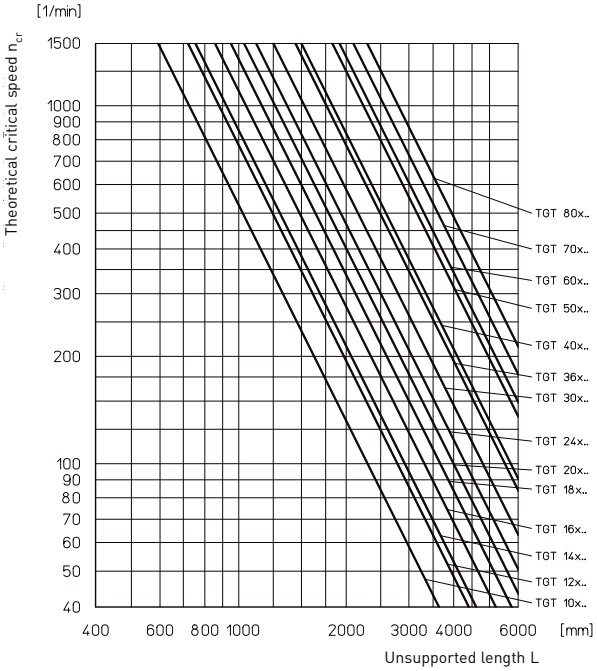

Bearing types
Typical values for the correction factor f_{cr} corresponding to the classical installation situations for standard shaft bearings.

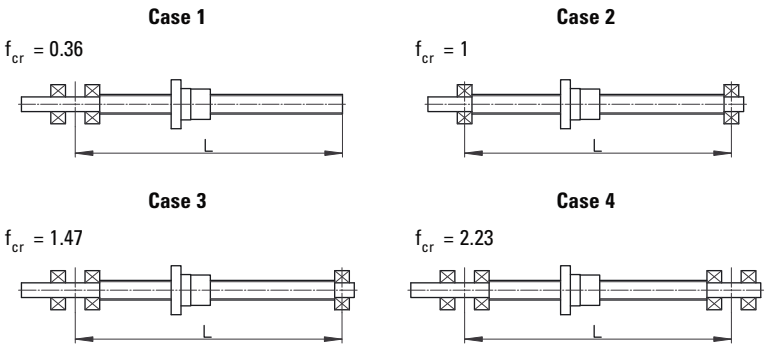

Calculation

Critical buckling force of trapezoidal thread screws
There is a risk of slender components such as shafts buckling to one side under axial compressive loading.

The permissible axial force according to Euler can be determined with the procedure described below. The safety factors appropriate to the system shall be taken into consideration prior to the specification of the permissible compressive force.

Maximum permissible axial force

(XIII) $$F_p = 0{,}8 \cdot F_c \cdot f_c$$

F_p Maximum permissible axial force [kN]
F_c Theoretical critical buckling force [kN], ➔ see graph
f_c Correction factor taking into consideration the type of shaft bearing ➔ see table

! The operating force may not be more than 80 % of the maximum permissible axial force

Theoretical critical buckling force F_c

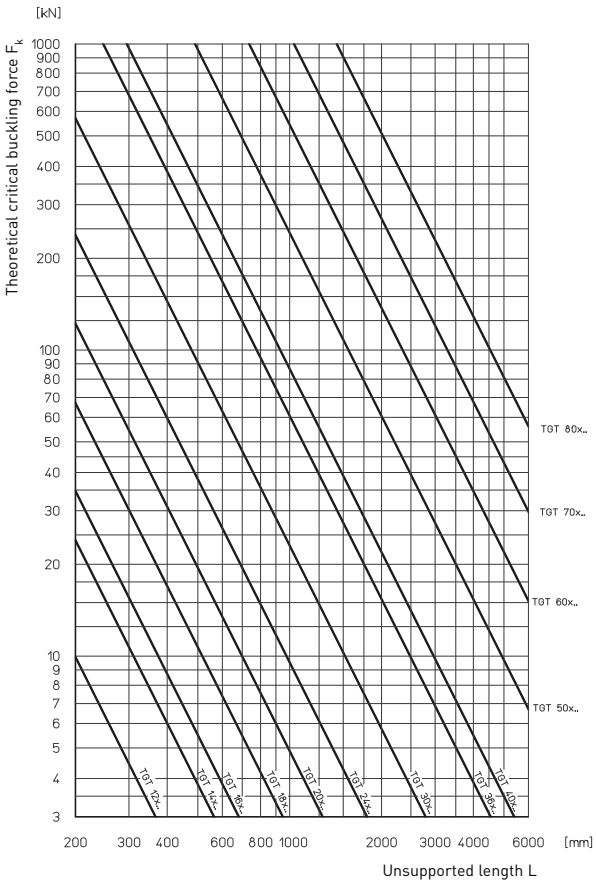

Bearing types
Typical values for the correction factor f_c corresponding to the classical installation situations for standard shaft bearings.

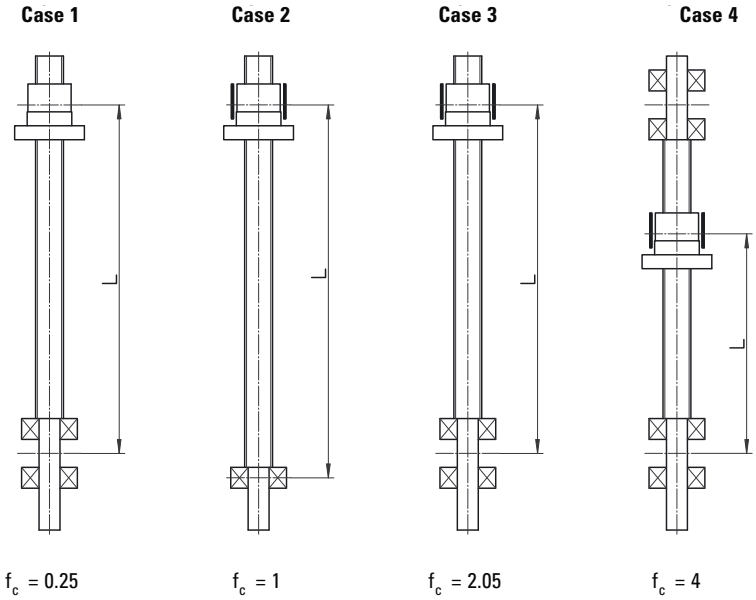

Calculation

Shaft sag as a consequence of its own weight
The dead weight of the unsupported shaft leads to sag, even in the case of properly installed lead screws, in which the forces acting are absorbed by external guides. The formula given below allows determination of the shaft's maximum sag.

Maximum shaft sag

(XIV) $$f_{max} = f_B \cdot 0{,}061 \cdot \frac{w_{TGS} \cdot L_{TGS}}{I_Y}$$

f_B	Correction factor taking into consideration the type of shaft bearing ➔ see table
I_Y	Geometrical moment of inertia [mm^4] ➔ see table on page 68
L_{TGS}	Free, unsupported shaft length [mm]
w_{TGS}	Distributed load [kg/m]

Theoretical maximum sag

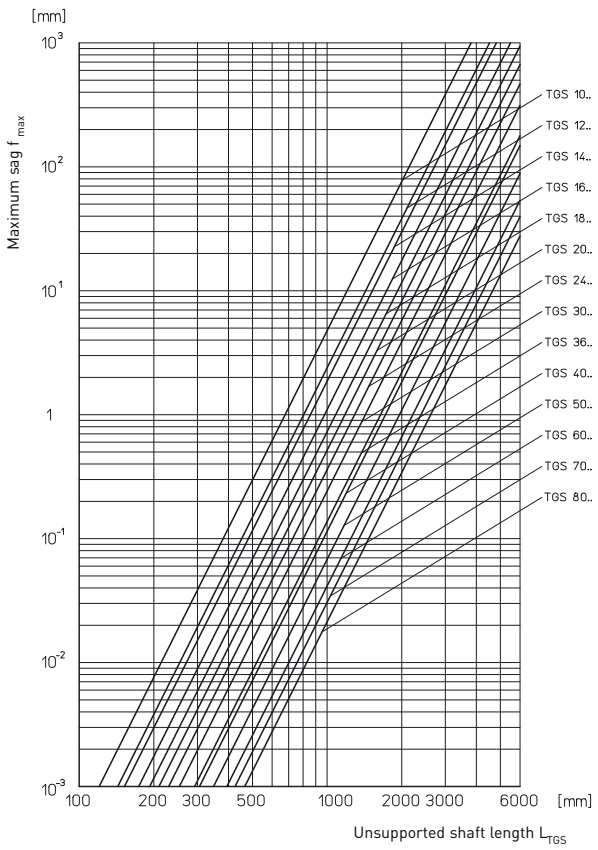

Bearing types
Typical values for the correction factor f_B corresponding to the classical installation situations for standard shaft bearings.

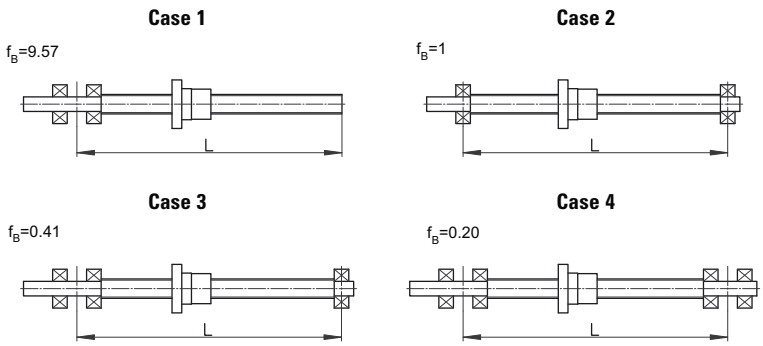

Calculation

Example calculation of trapezoidal screw

Given:

Trapezoidal thread lead screw
RPTS Tr 24x5 shaft
Length L = 1500 mm
Bearing journal case 2
Operating speed: n_{max} = 500 [rpm]

Sought:

Is the operating speed non-critical?
How great is the permissible axial force?
How great is the maximum sag?

Maximum permissible shaft speed n_{zul}

from (XII) $n_p = 0{,}8 \cdot n_{cr} \cdot f_{cr} = 0{,}8 \cdot 830\ 1/\text{min} \cdot 1 = 664\ 1/\text{min}$

Theoretical critical speed n_{cr} = 830 rpm
➔ Theoretical critical speed graph

from (XIII) $F_p = 0{,}8 \cdot F_c \cdot f_c = 0{,}8 \cdot 4{,}2\ \text{kN} \cdot 1 = 3{,}36\ \text{kN}$

Theoretical critical buckling force F_c = 4.2 kN
➔ from Theoretical critical buckling force graph

from (XIV) $f_{max} = f_B \cdot 0{,}061 \cdot \frac{w_{TGS} \cdot L_{TGS}}{I_Y} = 1 \cdot 0{,}061 \cdot \frac{2{,}85\ \text{kg/m} \cdot 1{,}5\ \text{m}}{0{,}460\ \text{cm}^4}$

$f_{max} = 0{,}57\ \text{mm}$

Distributed load W_{TGS} = 2.85 kg/m
Geometrical moment of inertia I_y = 0.460 cm^4
➔ from table on page 63

Result:

The lead screw selected is non-critical at n_{max} = 500 rpm.
It can be loaded with a maximum axial load of 3.36 kN and, mounted horizontally, will suffer a maximum sag of 0.57 mm.
(Note pressure per unit area and pv factor)

Calculation

Input torque and input power required

The input torque required for a lead screw is a result of the acting axial load, the thread pitch and the efficiency of the lead screw and its bearings. The acceleration torque must be checked if acceleration times are short and speeds are high.
As a matter of principle, it must be noted that a breakaway torque must be overcome when a trapezoidal thread lead screw starts to move.

Input torque required

(XV)

$$M_d = \frac{F_{ax} \cdot P}{2000 \cdot \pi \cdot \eta_A} + M_{rot}$$

F_{ax} Total axial load acting [N]
P Thread pitch [mm]
η_A Efficiency of total motion system
$= \eta_{TGT} \cdot \eta_{Fixed\ bearing} \cdot \eta_{Loose\ bearing}$
$\eta_{TGT\ (\mu = 0.1)}$ ➔ Table page 63
$\eta_{Fixed\ bearing} = 0.9 \ldots 0.95$
$\eta_{Loose\ bearing} = 0.95$
M_d Input torque required [Nm]
M_{rot} Rotary moment of acceleration [Nm]
$= J_{rot} \cdot \alpha_0$
$= 7.7 \cdot d^4 \cdot L \cdot 10^{-13}$
J_{rot} Rotary moment of inertia [kgm²]
d Shaft nominal diameter [mm]
L Shaft length [mm]
α_0 Angular acceleration [1/s²]

Efficiency η for friction factors other than $\mu = 0.1$

(XVI)

$$\eta = \frac{\tan\alpha}{\tan(\alpha + \rho')}$$

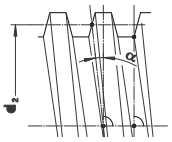

η Efficiency of the conversion of a rotary motion into a axial motion
α Pitch angle of the thread [°] ➔ Table page 63 or generally:

$$\tan\alpha = \frac{P}{d_2 \cdot \pi}$$

where P Thread pitch [mm]
d_2 Pitch diameter [mm]
ρ' Thread angle of friction [°]
$\tan\rho' = \mu \cdot 1.07$ for ISO trapezoidal thread
μ Coefficient of friction

	μ starting up (= μ_0)		μ in motion	
	dry	lubricated	dry	lubricated
Metal nuts	≈ 0.3	≈ 0.1	≈ 0.1	≈ 0.04
Plastic nuts	≈ 0.1	≈ 0.04	≈ 0.1	≈ 0.03

Input power

(XVII)

$$P_a = \frac{M_d \cdot n}{9550}$$

M_d Input torque required [Nm] ➔ from (XV)
n Shaft speed [rpm]
P_a Input power required [kW]

Calculation

Torque as a consequence of an axial load
Trapezoidal lead screws, the pitch angle α of which is greater than the friction angle ρ' are considered non-self locking. This means that an axial force applied generates a resulting torque on the shaft. The efficiency η' for the conversion of an axial motion into a rotary motion is less than that for the conversion of a rotary motion into an axial motion.

Holding torque required

(XVIII) $$M_d' = \frac{F_{ax} \cdot P \cdot \eta'}{2000 \cdot \pi} + M_{rot}$$

F_{ax} Total axial load acting [N]
P Thread pitch [mm]
η' Efficiency of the conversion of an axial motion into a rotary motion

$$= \frac{\tan(\alpha - \rho')}{\tan \alpha}$$
$$= 0{,}7 \cdot \eta$$

The influence of the efficiency of the bearings can be ignored.

M_d' Holding torque required [Nm]
M_{rot} Rotary moment of acceleration [Nm]
$= J_{rot} \cdot \alpha_0$
$= 7.7 \cdot d^4 \cdot L \cdot 10^{-13}$
- J_{rot} Rotary moment of inertia [kgm^2]
- d Shaft nominal diameter [mm]
- L Shaft length [mm]
- α_0 Angular acceleration [1/s^2]

KW splined shafts

Material: CK 45.
Based on DIN 5463.

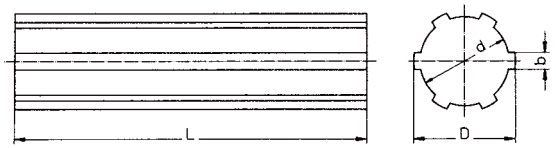

Designation	Dimensions [mm]			Weight [kg/m]
	ø D -0.07 -0.27	ø d +0.0 -0.08	b +0.0 -0.08	
KW 13	16	13	3.5	1.20
KW 16	20	16	4	1.90
KW 21	25	21	5	2.10
KW 26	32	26	6	5.00
KW 42	48	42	8	12.30
KW 46	54	46	9	15.30

Straightness: 0.5 – 0.6 mm/300 mm
Straightness: 0.1 mm/300 mm on request

SR sliding sleeve blank

Material: 9 Smn 28 K.
Based on DIN 5463.

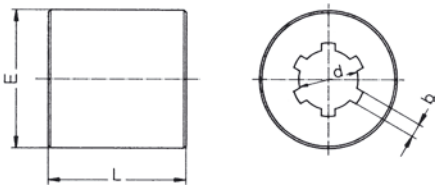

Designation	Dimensions [mm]				Weight [kg/each]
	ø d G_6	b F_9	ø E	L	
SR 13	13	3.5	32	26	0.15
SR 16	16	4	40	35	0.25
SR 21	21	5	45	43	0.40
SR 26	26	6	60	59	1.00
SR 42	42	8	90	71	2.60
SR 46	46	9	90	95	3.25

EK complete clamping ring

Material: C 45, surface burnished. Drillings match ES.
Based on DIN 5463.

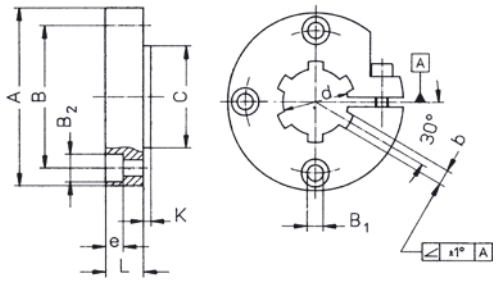

Designation	Number of grooves	Dimensions [mm]										Weight [kg/each]
		ø d G_6	b F_9	ø A	ø B	ø B_1	ø B_2	e	ø C f_7	K	L	
EK 16	6	16	4	52	38	5.3	10	6	26	2	14	0.20
EK 21	6	21	5	62	48	6.4	11	7	35	3	14	0.25
EK 26	6	26	6	70	56	6.4	11	7	40	3	15	0.25
EK 42	8	42	8	95	75	10.5	18	11	60	3	22	0.85
EK 46	8	46	9	99	80	10.5	18	11	65	3	24	0.95

ES complete sliding sleeve

Material: C 45 Grooves do not match bores.
Based on DIN 5463.

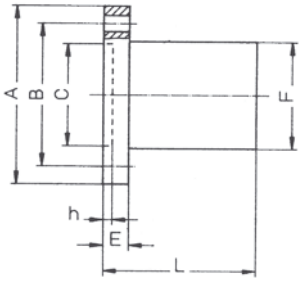

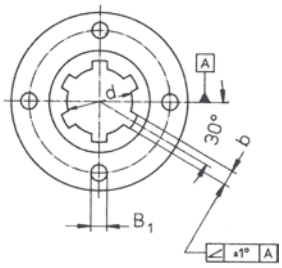

Designation	Number of grooves	Dimensions [mm]										Weight [kg/each]
		ø d G_6	b F_9	ø A	ø B	ø B_1	ø C H_7	h	ø F h_7	L	E	
ES 13	6	13	3.5	43	32	4.3	20	3	24	30	8	0.10
ES 16	6	16	4	52	38	5.3	26	3	28	35	9	0.20
ES 21	6	21	5	62	48	6.4	35	3.5	34	50	10	0.30
ES 26	6	26	6	70	56	6.4	40	3.5	42	60	10	0.50
ES 42	8	42	8	95	75	10.5	60	4	60	90	16	1.30
ES 46	8	46	9	99	80	10.5	65	4	65	100	16	1.50

ESS complete sliding sleeve made from special bronze

Material: High-quality bronze GBZ 12 Grooves do not match bores.
Based on DIN 5463.

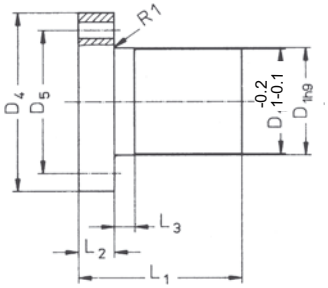

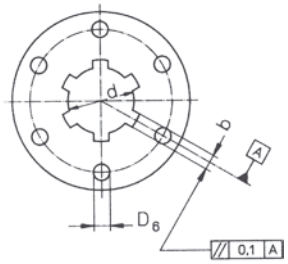

Designation	Number of grooves	Dimensions [mm]									Weight [kg/each]
		ø d G_6	b F_9	D_1	D_4	D_5	D_6	L_1	L_2	L_3	
ESS 16	6	16	4	28	48	38	6	44	12	8	0.25
ESS 21	6	21	5	32	55	45	7	44	12	8	0.30
ESS 26	6	26	6	38	62	50	7	46	14	8	0.40
ESS 42	8	42	8	63	95	78	9	73	16	10	1.45
ESS 46	8	46	9	72	110	90	11	97	18	10	2.25

Installation and maintenance

TGT trapezoidal thread screws

Installation
Trapezoidal thread screws must be carefully aligned on installation – if the appropriate measuring equipment is not available, the lead screw shall be moved once by hand over the entire length before the input unit is fitted. Uneven force requirements and/or running traces on the external diameter of the shaft here indicate errors in the alignment between shaft axis and guide. In this case, first slacken off the relevant mounting screws and then operate the lead screw once again by hand. If the force requirement is now uniform, the corresponding elements must be aligned, otherwise the alignment error must be determined by slackening further mounting screws.

Caps
Trapezoidal thread screws are inherently less sensitive to contamination than recirculating ball screws, especially at low speeds (e.g. manual operation).

Motion drives, in particular those using plastic nuts, however, also require protective measures similar to those for recirculating ball screws.

Lubrication

Oil lubrication
Is only used on trapezoidal thread screws in special cases.

Grease lubrication
This is the usual lubrication for trapezoidal thread screws. The lubrication intervals depend on the operating conditions; it is recommended that the shaft is cleaned before being greased, especially if high performance lubricating systems are being used.
Grease grades: roller bearing greases without a solid lubricant constituent.

Operating temperature
Depends on the nature of the nut used, the lubricating conditions and the requirements made. Please consult us for operation at temperatures in excess of 100 °C (in excess of 70 °C for plastic nuts).

Wear
May be tested by hand; the nut must be replaced if the axial play of a single thread lead screw is greater than $^1/_4$ of the lead.

Trapezoidal thread screw/helical spring cover/splined shafts

The structure of the order code

Trapezoidal thread screws

1.	2.	Tr	3.	X	4.	P	5.	6.	7.	8.	9.	10.	11.	12.

1. Product
TGS = trapezoidal-thread screw shaft
TGM= Trapezoidal thread nut

2. Type
Shaft RPTS
Nut: LKM, EKM, KSM, SKM, LRM, EFM

3. Thread nominal diameter [mm]

4. Thread lead [mm]

5. Thread pitch [mm]
Only in the case of multiple-start threads: The distance between two consecutive threads in the axial direction = pitch/number of starts

6. Thread direction
RH = right hand thread
LH = left hand thread

7. Shaft end 1
Standard end form D, F, H, J, L, S, T, W, Z, see pp. 71ff
K = in accordance with attached customer drawing
X = separating only

8. Reference to end length 1
End length for version K [mm]

9. Overall length of TGS [mm]

10. Shaft end 2
Standard end form D, F, H, J, L, S, T, W, Z, see pp. 71ff
K = in accordance with attached customer drawing
X = separating only

11. Reference to end length 2
End length for version K [mm]

12. Special designs or with accessories
0 = no
1 = yes

Ordering example:

1 Trapezoidal-thread lead screw with shaft ends

TGS	RPTS	Tr	024	X	10	P	05	RH	L		0900	W		0
1.	2.		3.		4.		5.	6.	7.	8.	9.	10.	11.	12.

1. Product
TGS= trapezoidal-thread screw shaft

2. Type
Shaft RPTS

3. Thread nominal diameter [mm]
24

4. Thread lead [mm]
10

5. Thread pitch [mm]
5

6. Thread direction
RH = right hand thread

7. Shaft end 1
Standard end form L

9. Overall length of TGS [mm]
900

10. Shaft end 2
Standard end form W

12. Special designs or with accessories
0 = no

Ordering example:

1 Trapezoidal thread nut

TGM	LRM	Tr	024	X	10	P	05	RH
1.	2.		3.		4.		5.	6.

1. Product
TGM= Trapezoidal thread nut

2. Type
Nut: LRM

3. Thread nominal diameter [mm]
24

4. Thread lead [mm]
10

5. Thread pitch [mm]
5

6. Thread direction
RH = right hand thread

The structure of the order code

Helical spring cover

SF				
1.	2.	3.	4.	5.

1. Product
SF = Helical spring cover

2. Minimum diameter D8 [mm]

3. Overall length [mm]

4. Minimum length L8 [mm]

5. Mounting position
V = vertical
H = horizontal

The structure of the order code

splined shaft

KW	42	
1.	2.	3.

1. Product
KW= splined shaft

2. Size

3. Length [mm]

With their easy running, precise and cost-effective positioning function, lead screws offer the optimum solution for your application.

The Thomson Neff precision lead screws manufactured by Thomson Neff are an outstanding and economical solution to your linear motion requirements. Thomson Neff has been active for more than 25 years developing and producing the highest quality lead screws in this industrial sector. Our precision rolling process guarantees precision positioning to 0.075 mm/300 mm, and our coating method using PTFE creates systems with a lower drag torque and a higher service life.

Thomson Neff has a wide range of standard plastic nuts systems available, in the form of anti-backlash or standard Supernuts®. A composite material of acetal and PTFE is used in all these standard plastic nut systems, offering an outstanding lubricant capability with or without supplementary lubrication, at the same time achieving a low rate of wear. As a result of the introduction of our new, unique patented backlash-free method design, Thomson Neff is able to offer systems with high axial stiffness, zero backlash and a very low drag torque, reducing the demands on the motor. This creates more cost-effective products with a higher performance and longer service life. The two designs automatically adapt to the wear conditions, so that zero backlash is guaranteed for the life of the nut.

Thomson Neff also offers a design service for your application requirements. This means that lead screws can be manufactured to meet your specifications. Get in touch with Thomson Neff today and discuss your application with our experienced product specialists.

Supply options

Reducing backlash is of decisive importance in ensuring precise positioning. Several types of preload variants, which all use a resilient preload are available on the market. As these mechanisms are only limited in their stiffness, a high preload is necessary to retain the position.
This leads to a high drag torque, shorter service life and reduced performance. The costs for
the system increase and a larger motor is required.

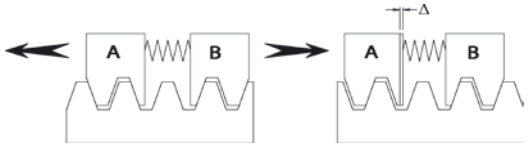

The solution – THOMSON NEFF

With the introduction of the patented XC series of nuts with **ActiveCAM**, optimum axial stiffness with minimum drag torque at the same time is achieved. The use of a an extremely stiff stainless steel sleeve for the preload leads to an incomparable axial stiffness. The axial backlash is rectified without high preloading and so the lowest possible drag torque is achieved.

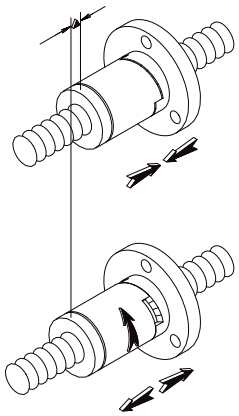

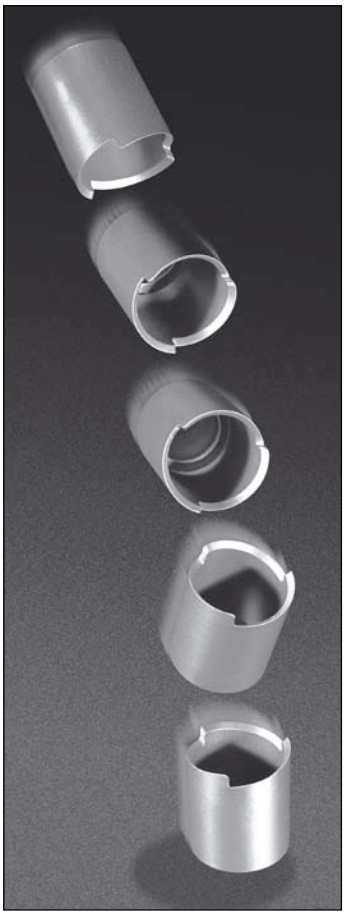

Readjusting the preloading following wear

The wear occurring over time is automatically compensated for by the unique **ActiveCAM**mechanism, without sacrificing stiffness and positioning accuracy, or influencing the drag torque.
US Patent #5839321 and one or more foreign equivalents.

Quality lead screws

- ActiveCAM technology
- High-quality plastic nuts
- High precision

Fields of application for lead screws

Engraving machines

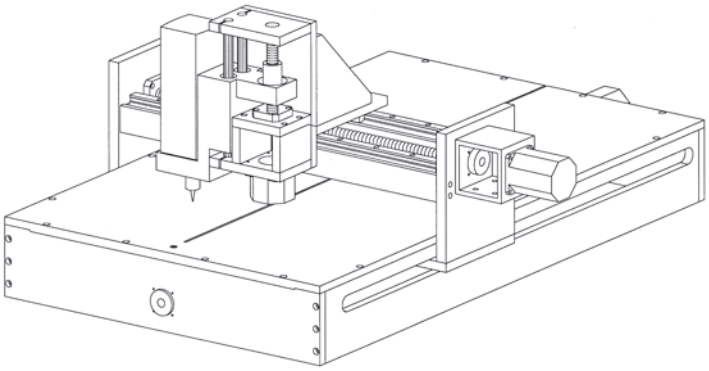

Medical equipment

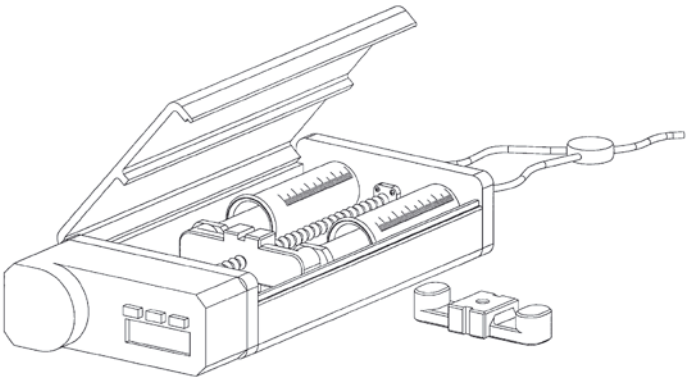

Semiconductor production

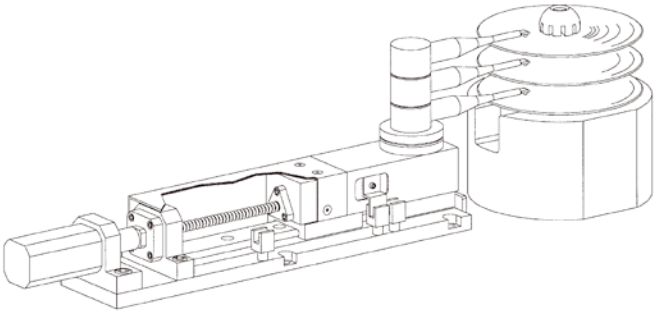

Laboratory equipment

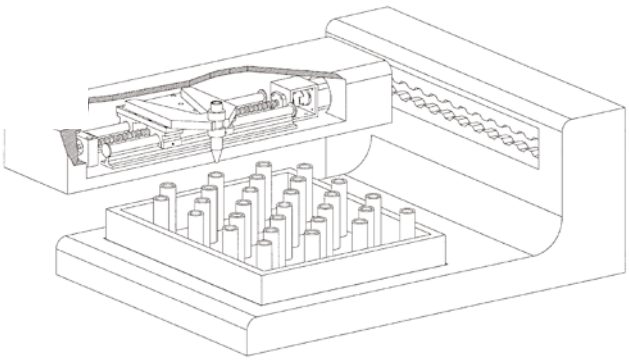

Precision lead screws and Supernuts®

Features/benefits

Low costs
Considerable savings over ball screws.

Variety
Huge selection of leads and diameters.

Lubrication
Internally lubricated plastic nuts may be used without supplementary lubrication. We nevertheless recommend the use of TriGEL grease or a dry lubricant to extend the service life. See page 96.

Vibration and noise generation
No vibration from ball recirculation and frequently
less audible noise generation by comparison with recirculating ball screws.

Aspects of the design

Load
Supernuts are a cost-effective solution for medium to light loading. In vertical applications, the Anti-Backlash Supernuts should be mounted with the thread/flange on the underside.

Unilateral load
Unilateral loads that may exert a torque on the nut will lead to premature failure.

Critical speed
See critical speed graph on page 89.

Buckling load
See buckling load graph on page 90.

Self-locking
Lead screws can be self-locking at small leads. For the best possible operating conditions, the shaft pitch should always be greater than 1/3 of the nominal diameter.

Customized solution
Ability to adapt the components to your application.

Corrosion resistant*
Stainless steel shafts, Acetal nuts.

Environment
Less susceptible to contamination by particles than recirculating ball screws.

Low weight
There is less mass to move.

Temperature
The heat generated by the environment and friction is the principal cause for premature failure of the plastic nuts. Note the limit values for temperature listed below and discuss your application with regard to continuous operation, high loading and high-speed applications with our product specialists. Thomson Neff recommends bronze nuts for very high temperature environments. We will also be pleased to advise you on the selection of a high temperature plastic for a custom application.

Efficiency
The following is true except for very large leads: the greater the lead, the better the efficiency. Even though acetal in combination with PTFE has excellent lubricating properties, recirculating ball screws have significantly greater efficiency than lead screws.
See page 95 for the actual efficiency.

Length limit values

Shaft diameter	maximum length
10 mm	1200 mm
12 – 16 mm	1800 mm
>16 mm	3600 mm

Pitch precision

Standard quality (SRA)	250 µm/300 mm
Precision quality (SPR)	75 µm/300 mm

Mounting		Shafts	Nuts**			
Maximum temperature	Coefficient of friction	Material	Material	Tensile strength	Water absorption (24 hour %)	Coefficient of thermal expan-sion
82 °C	0.08 - 0.14	Stainless steel*	Acetal with PTFE	55 N/mm²	0.15	9.7 x 10^{-5} 1/°C

* 1.4301 (AISI 304) and 1.4305 (AISI 303)
** Other materials available on a custom basis.

Useful formulas for lead screws

TORQUE, ROTARY LINEAR

Drive on the shaft to move the nut, or drive on the nut to move the shaft.

$$\text{Torque (Nmm)} = \frac{\text{load (N) x lead (mm)}}{2\pi \text{ x efficiency}}$$

EFFICIENCY

$$\text{\% efficiency} = \frac{\tan(\text{pitch angle})}{\tan(\text{pitch angle} + \text{“arctan” f})} \times 100$$

f = coefficient of friction

TORQUE, LINEAR ROTARY

Load on the nut to rotate the shaft.

$$\text{Torque} = \frac{\text{load x lead x efficiency}}{2\pi}$$

As a rule, the following is true: Systems with an efficiency of 50 % and greater are not self-locking. For efficiency see page 95. The efficiencies listed in the catalog are calculated for a coefficient of friction of 0.1.

Graph of critical rotational speed limit values

Every lead screw has a rotational speed limit. This is the point at which the rotational speed sets up heavy vibration. This critical point changed depending on the end bearing supports used and the bearing combination.

To use this chart, you must determine the speed of rotation required and the maximum length between the bearing supports. Then select one of the four bearing combinations shown below. The critical speed limit can be found by locating the point at which the speed of rotation (horizontal lines) intersects with the unsupported shaft length (vertical lines) as modified by the bearing combination listed below. It is recommended that the lead screws be operated at no more than 80% of the critical speed limit value.

Warning: The graphs for the shaft diameters illustrated are based on the smallest minor diameter of a standard shaft within the nominal size range and are cut off at the maximum speed of rotation for the nut. This value for the rotational speed MAY NOT BE EXCEEDED, whatever the shaft length.

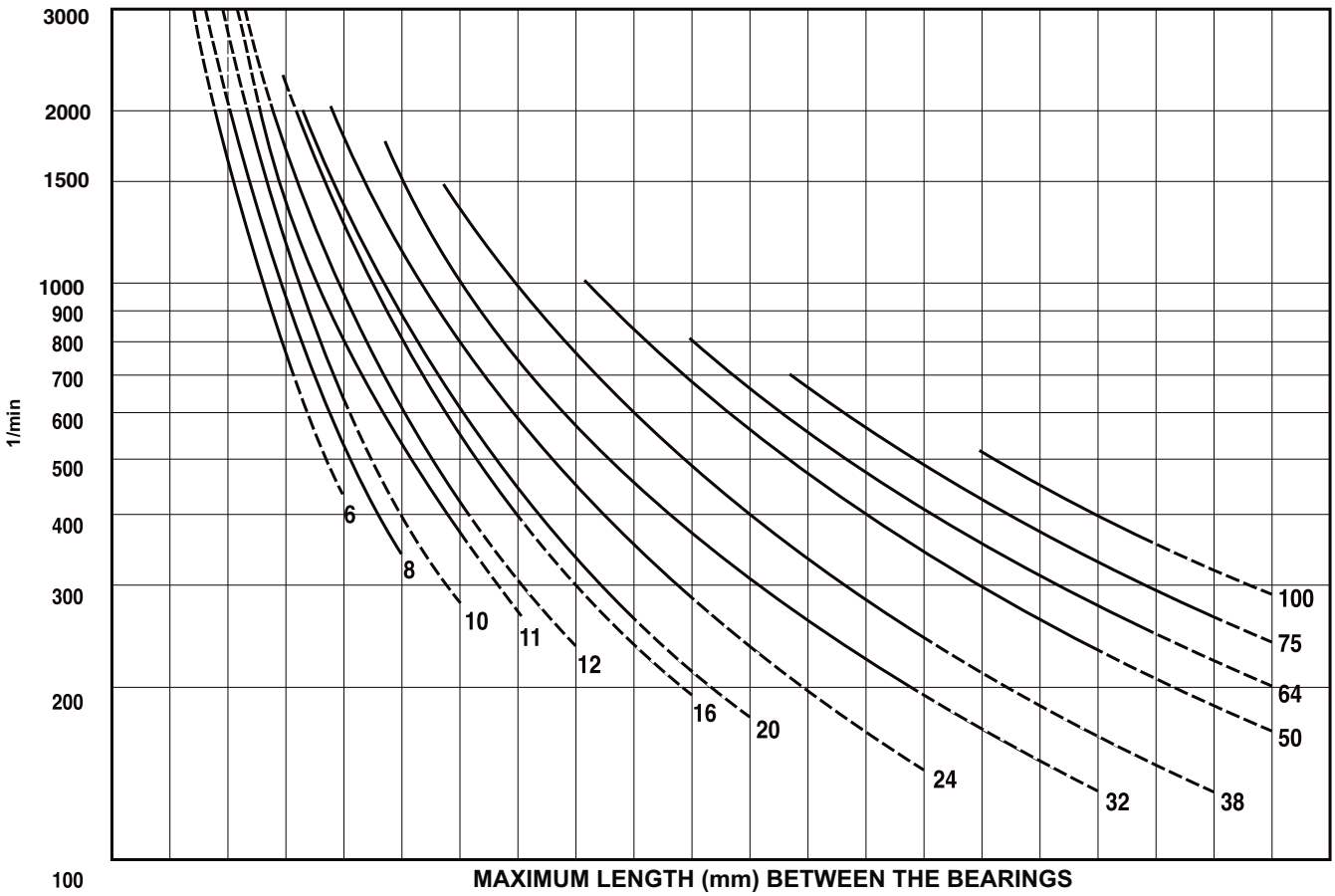

Bearing scenario 1	150	300	460	610	760	910	1070	1220	1370	1520	1680	1830	1980	2130	2290	2440	2590	2740	3050	3200
Bearing scenario 2	250	510	760	1020	1270	1520	1780	2030	2290	2540	2790	3050	3300	3560	3810	4060	4320	4570	4830	5080
Bearing scenario 3	300	610	910	1220	1550	1850	2160	2460	2770	3070	3380	3910	4010	4320	4620	4930	5230	5540	5840	6150
Bearing scenario 4	380	760	1140	1520	1910	2290	2670	3020	3400	3780	4170	4550	4930	5310	5690	6070	6450	6830	7210	7570

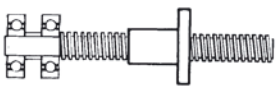

Bearing scenario 1

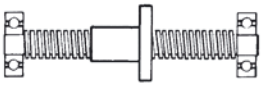

Bearing scenario 2

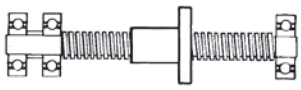

Bearing scenario 3

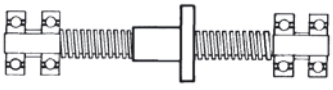

Bearing scenario 4

Graph of critical buckling force

This graph is used to determine the maximum compression loading on the shafts. Normally, shafts operated under tensile stress are capable of withstanding a loading up to the design load capacity of the nut. The bearing combinations influence the load capacity of the shaft. The four standard variants are listed below with the corresponding bearing scenarios. To determine the safe minimum diameter of the shaft, you must determine the point at which the graphs for the compressive load (horizontal) and the shaft length (vertical) intersect. Consult the manufacturer if the loading values lie in the area of the dotted lines.

Warning: The load capacity of the nuts MAY NOT BE EXCEEDED. The curves for the shaft diameter are based on the smallest minor diameter of a standard shaft within the nominal size range.

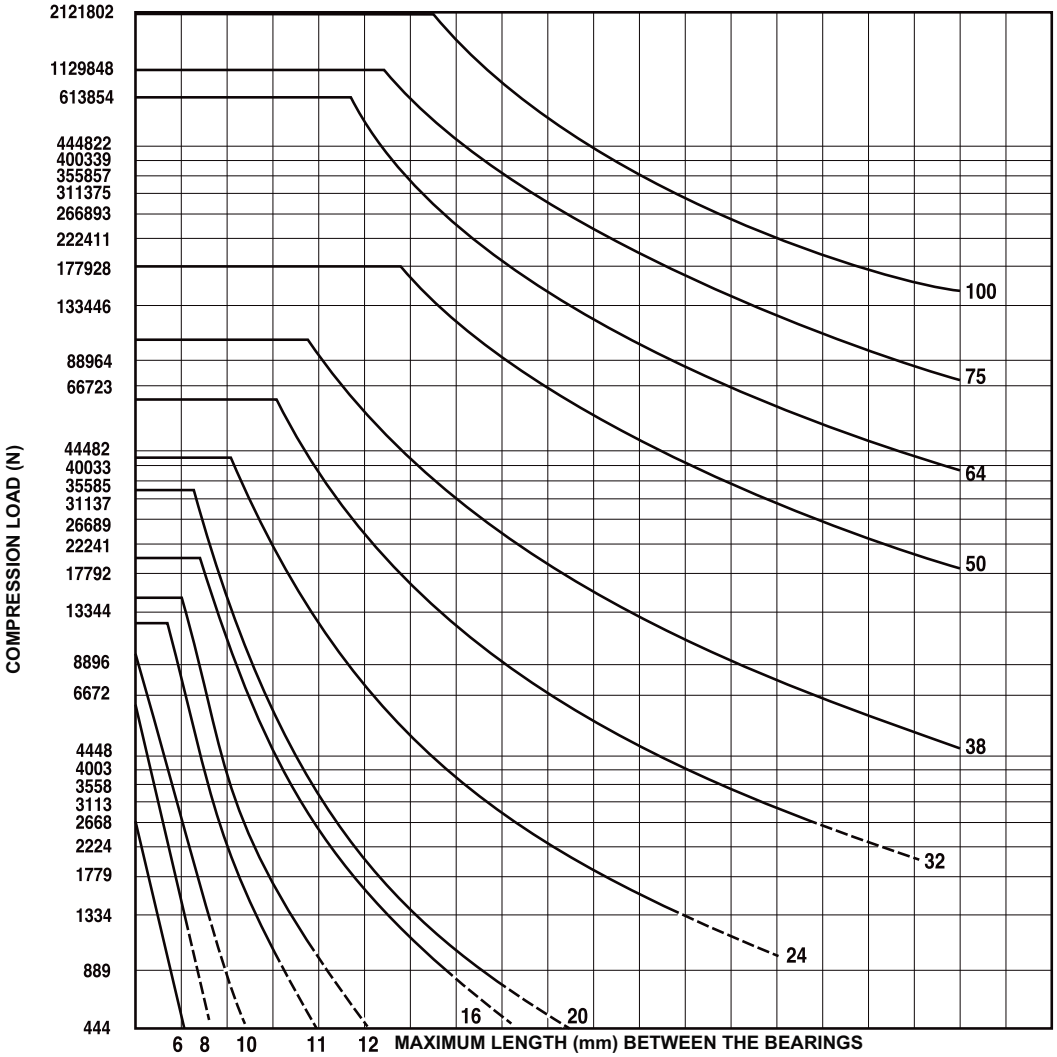

Bearing scenario 1	130	250	380	510	640	760	890	1020	1140	1270	1400	1520	1650	1780	1910	2030	2160	2290	2410
Bearing scenario 2	250	510	760	1020	1270	1520	1780	2030	2290	2540	2790	3050	3300	3560	3810	4060	4320	4570	4830
Bearing scenario 3	360	710	1070	1450	1800	2160	2510	2870	3230	3580	3960	4320	4670	5030	5380	5740	6100	6480	6860
Bearing scenario 4	510	1020	1520	2030	2540	3050	3560	4060	4570	5080	5590	6100	6600	7110	7620	8130	8640	9140	9650

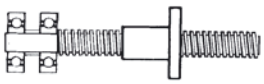

Bearing scenario 1

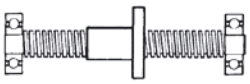

Bearing scenario 2

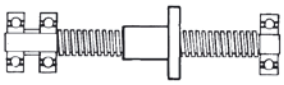

Bearing scenario 3

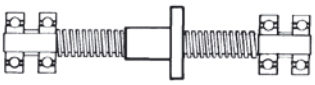

Bearing scenario 4

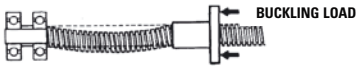

Compression load (buckling load)

Tensile load

Lead screw product features

Series	Thomson Neff precision lead screw
Lead precision	Standard - 250 µm/300 mm Precision - 75 µm/300 mm
Diameter	10 to 24 mm
Lead	2 to 45 mm
Backlash	0.02 to 0.25 mm (standard nut) backlash-free version available
Dynamic load	up to 1550 N
Maximum static load	up to 6675 N
Catalog page	70 to 72

Lead screw product availability

Metric

Lead (mm)

Diameter (mm)	2	3	4	5	6	8	10	12	15	16	20	25	35	45
10	● ○	●		●	●		●				●		●	
12		●	●	●	●		●		●			●		●
16			● ○	●		●				●		●	●	
20			● ○			●		●		●	●			●
24				● ○										

● = size with right hand thread in stock ○ = size with left hand thread in stock

Inch

Lead screws in inch dimensions are also available.
Further information may be found on the Internet at **www.thomsonlinear.com**

Lead (inches)

Diameter (inches)	0.050	0.063	0.083	0.100	0.125	0.167	0.200	0.250	0.375	0.500	0.800	1.000	1.200	2.000
3/8		● ○	● ○	● ○	● ○	●	●	● ○	● ○	● ○		●	●	
7/16					●			●		●				
1/2		●		● ○			●	●		●	●	●		
5/8				● ○	● ○		●	●		●				
3/4				● ○	● ○	● ○	● ○			●		●		● ○
1				● ○	● ○		● ○	● ○		●		●		

Note: Miniature sizes are also available. Information may be found on the Internet at **www.thomsonlinear.com**
Customized diameters and leads on request.

Ordering information

Thomson Neff designs the lead screws for optimum performance. To ensure correct operation, it is recommended that our nuts and shafts are used only with the appropriate Thomson Neff products, as manufactured by Thomson Neff. This is of particular importance in the case of our own thread dimensions. Select a shaft size complying with DIN from page 95 if interchangeability is a requirements criterion.

The use of a lubricant is recommended for the operation of a lead screw with a plastic nut. This increases the service life of the unit and the permissible operating load.
Note: The load indications in the catalog are based on the use of a lubricant.
See pages 96 and 97 for lubrication options.

Nut part number
(see pages 93 and 94)

Prefix for nut style number (letters only - 2 or 3 characters)			**Shaft size from table on page 95.** (No statement of precision prefix)

Example

X	C	B	10x2M

Note: Make sure that nut you selected is offered for use with the shaft diameter selected. See "Shaft series" on pages 93 and 94 to verify.

Shaft part numbers (see page 95)

				-
Precision prefix (3 letters for precision or standard accuracy)			**Shaft size** (indication of diameter and lead)	**Shaft length** (please state units - preferably mm)

Example

S	P	T	10x2M	150 mm

The shaft and nut are designed to work together properly where these two components have the same suffix for the shaft size (see examples listed above).

XC series – The leading performer

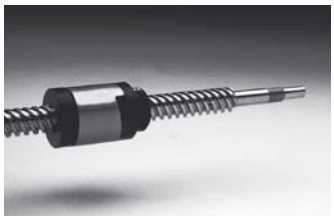

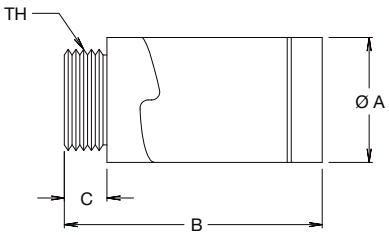

Threaded nut style

Model no.	Shaft diameter (mm)	May also be used with inch thread	Dimensions				Permissible dynamic load (N)	Drag torque	
			A (mm)	B (mm) max	C (mm)	TH (mm)		min. (Nmm)	max. (Nmm)
CB3700	10	5/16, 3/8	20.8	47.6	6.4	M16 x 1.5	100	7	21
CB5000	12	7/16, 1/2	28.4	57.2	9.5	M25 x 1.5	550	7	21
CB6200	16	5/8	35.6	66.0	12.7	M30 x 1.5	775	14	42
CB7500	20	3/4	41.4	73.7	12.7	M35 x 1.5	1100	21	71
CB10000	24	1	47.8	76.2	15.2	M40 x 1.5	1550	35	71

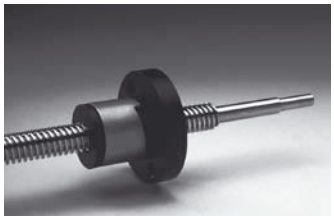

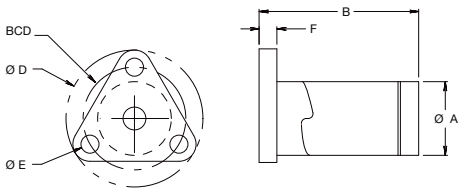

Only XCF3700

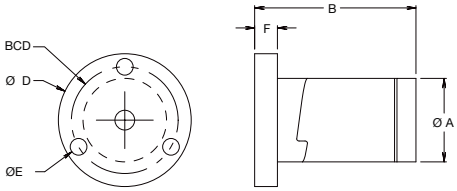

XCF5000, XCF6200

Flanged nut style

Model no.	Shaft diameter (mm)	May also be used with inch thread	Dimensions						Permissible dynamic load (N)	Drag torque	
			A (mm)	B (mm) max	D (mm)	E (mm)	F (mm)	BCD (mm)		min. (Nmm)	max. (Nmm)
CF3700	10	5/16, 3/8	20.8	47.6	38.1	5.1	5.1	28.6	100	7	21
CF5000	12	7/16, 1/2	28.4	57.2	44.5	5.6	7.6	35.5	550	7	21
CF6200	16	5/8	35.6	66.0	54.1	5.6	12.7	42.9	775	14	42

AFT3700 - The OEM solution

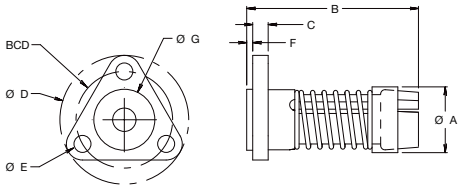

Flanged nut style

Model no.	Shaft diameter (mm)	May also be used with inch thread	Dimensions								Permissible dynamic load (N)	Drag torque	
			A (mm)	B (mm)	C (mm)	D (mm)	E (mm)	F (mm)	G (mm)	BCD (mm)		min. (Nmm)	max. (Nmm)
AFT3700	10	3/8, 7/16	19.6	50.8	5.1	38.1	5.1	1.5	18.0	28.6	45	14	35

See page 92 for notes on ordering

SB series – Compact screw nuts

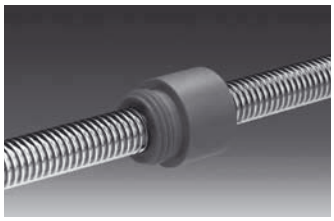

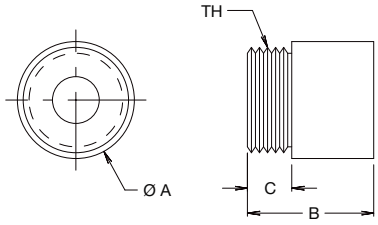

Threaded nut style

Model no.	Shaft diameter (mm)	May also be used with inch thread	Dimensions				Permissible dynamic load (N)	Maximum static load (N)	Drag torque
			A (mm)	B (mm)	C (mm)	TH (mm)			
SB3700	10	5/16, 3/8	19.1	19.1	6.4	M16 x 1.5	310	1550	No preloading
SB5000	12, 16	7/16, 1/2	25.4	25.4	9.5	M22 x 1.5	445	2225	
SB1000	20, 24	3/4, 1	38.1	38.1	12.7	M35 x 1.5	1335	6675	

MTS series - Simple to fit flanged nut

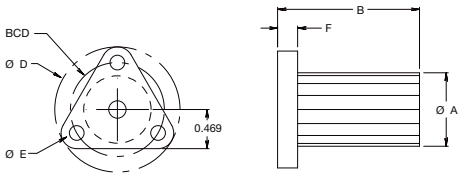

MTS3700 solo

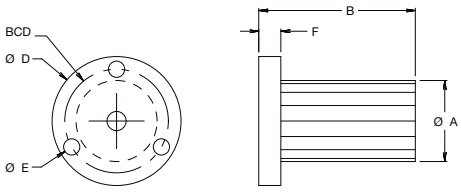

MTS5000, MTS6200, MTS7500

Flanged nut style

Model no.	Shaft diameter (mm)	May also be used with inch thread	Dimensions						Permissible dynamic load (N)	Drag torque
			A (mm)	B (mm)	D (mm)	E (mm)	F (mm)	BCD (mm)		
MTS3700	10	3/8, 7/16	18.0	38.1	38.1	5.1	5.1	28.6	325	No preloading
MTS5000	12	1/2	19.1	38.1	38.1	5.1	6.4	28.6	550	
MTS6200	16	5/8	22.4	41.4	38.1	5.1	7.6	30.2	775	
MTS7500	20	3/4	28.6	44.5	50.8	5.1	7.6	36.5	1200	

See page 92 for notes on ordering

Note: The permissible loading describes the maximum operating load with lubrication at room temperature, 50 % duty time and 500 rpm. Increasing the speed of rotation will lead to a reduction in the maximum operating load.
At 1000 rpm, the operating load is approximately 50 % of the permissible load.

Metric stainless steel precision trapezoidal thread lead screw shafts

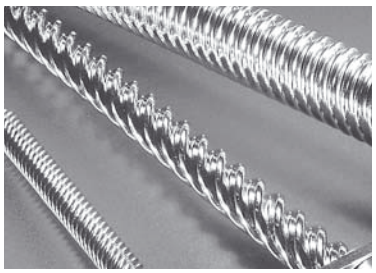

Rolled precision trapezoidal thread lead screws have a polished finish and thus offer optimum efficiency and low wear. All shafts are made from stainless steel to ensure resistance to corrosion and a smooth finish. SPT and SRT shafts comply with the requirements of DIN 103, while SPR and SRA shafts have improved thread forms for high performance.

Shaft diameter (mm)	Lead (mm)	Part number			Minor diameter (mm)	Efficiency with coefficient of friction of 0.1 (%)
		Prefix for precision accuracy	Prefix for standard accuracy	Size		
10	2*	SPT	SRT	10 x 2M	7.4	42
	3^	SPT	SRT	10 x 3M	6.4	53
	5	SPR	SRA	2-10 x 2.5M	7.1	64
	6	SPR	SRA	4-10 x 1.5M	8.2	66
	10	SPR	SRA	5-10 x 2M	7.5	76
	20	-	SRA	6-10 x 3.3M	8.4	81
	35	-	SRA	10-10 x 3.5M	7.4	81
12	3*	SPT	SRT	12 x 3M	8.0	48
	4	SPR	SRA	2-12 x 2M	9.2	54
	5^	SPT	SRT	2-12 x 2.5M	8.9	59
	6	SPR	SRA	3-12 x 2M	9.1	63
	10^	SPT	SRT	4-12 x 2.5M	8.9	73
	15	SPR	SRA	6-12 x 2.5M	8.7	78
	25	-	SRA	10-12 x 2.5M	9.2	82
	45	-	SRA	15-12 x 3M	9.6	81
16	4*	SPT	SRT	16 x 4M	11.3	48
	5	SPR	SRA	2-16 x 2.5M	12.2	52
	8	SPR	SRA	4-16 x 2M	13.0	63
	16	SPR	SRA	7-16 x 2.3M	12.6	75
	25	-	SRA	5-16 x 5M	11.5	80
	35	-	SRA	7-16 x 5M	12.2	82
20	4*	SPT	SRT	20 x 4M	15.3	42
	8	SPR	SRA	2-20 x 4M	14.8	59
	12	SPR	SRA	3-20 x 4M	15.0	67
	16	SPR	SRA	4-20 x 4M	15.0	72
	20	-	SRA	5-20 x 4M	15.0	76
	45	-	SRA	9-20 x 5M	15.8	82
24	5*	SPT	SRT	24 x 5M	18.5	42

*complies with the requirements specified in DIN 103 Parts 1 and 2. Tolerance class 7e.
^*complies with the requirements specified in DIN 103 Part 1, not defined in Parts 2 and 3.
See page 88 for maximum available shaft lengths
See page 92 for notes on ordering

Lubrication

Overview
We offer a complete range of lubricants including our greases for clean room and vacuum uses. The TriGel product range has been especially developed to provide a lubrication solution for a wide range of applications in linear motion systems. Select the lubricant suited to your requirements.
This will ensure that you get the best performance from your Thomson Neff products.

Lubrication selection table for trapezoidal thread lead screws

Thomson Neff	**TriGel-300S**	**TriGel-450R**	**TriGel-600SM**	**TriGel-1200SC**	**TriGel-1800RC**
Application	Lead screws, Supernuts, plastic nuts	Ball screw linear bearings	Bronze nuts	Lead screws, plastic nuts clean room, high vacuum	Ball screw linear bearings, bronze nuts, clean room, vacuum
Maximum temperature	200 °C (392 °F)	125 °C (257 °F)	125 °C (257 °F)	250 °C (482 °F)	125 °C (257 °F)
Loaded material	plastic on plastic or metal	Metal on metal	Metal on metal bronze on steel	plastic or metal, combination	Metal on metal
Mechanical load	slight	medium	medium to heavy	slight to medium	medium
Very low torque change in relation to the temperature	yes	—	—	yes	—
Very low starting torque	yes	yes	—	yes	yes
Compatibility with reactive chemicals	not recommended without OEM testing	not recommended without OEM testing	not recommended without OEM testing	possible	not recommended without OEM testing
Compatibility with plastics and	can lead to swelling of the silicon rubber seal	can lead to swelling of the EPDM seal	can lead to swelling of the EPDM seal	possible	can lead to swelling of the EPDM seal
elastomers Clean room use	not recommended	not recommended	not recommended	possible	possible
Use in high vacuum	not recommended	not recommended	not recommended	possible	possible
Vapor pressure (25 °C)	changes with volume	changes with volume	changes with volume	1 x 10^{-6} Pa	0.5 x 10^{-6} Pa
Packaging 10 cc syringe 0.45 kg tube	**TriGel-300S** **TriGel-300S-1**	7832867/**TriGel-450R** 7832868/**TriGel-450R-1**	0.1 kg tube/**TriGel-600SM**	**TriGel-1200SC** n.a.	7832869/**TriGel-1800RC**

* Maximum temperature for continuous exposure. Higher temperatures may be permissible but should be validated in the actual end use by the OEM.
Low temperature limits are -15°C or lower. Further information may be obtained from Thomson Neff.

PTFE dry lubricant

Developed for trapezoidal lead screw applications with plastic on metal

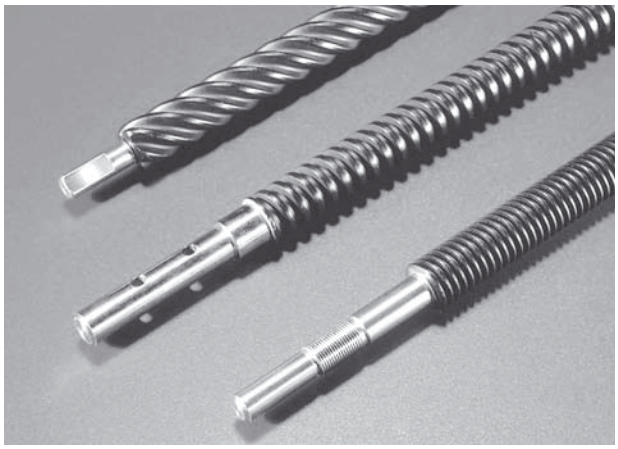

A PTFE coating comprises a dry coating, forming a lubricating and barrier layer between the metal substrate and the polymer nut or ball nut. This means that the application of an additional lubricant that must be renewed is unnecessary in many cases.
The coating is very well suited to our XC (SuperNut) series, comprising plastic nuts and stainless steel lead screws. Service intervals for lubrication are no longer necessary, and the coating does not attract particles of dirt as a lubricant does. Although lower coefficients of friction are possible with a lubricant than with a dry lubricant, lubrication must be maintained to avoid a drop in performance. Coating with PTFE is an attractive and cleaner* alternative to greases and oils.

Typical features

Type:	Connection with solid lubricant
Aim:	Increased lubrication, reduced friction/wear
Appearance:	Black coating
Thickness:	Approximately 13 – 25 µm
Active lubricant:	Polytetrafluorethylene
Coefficient of friction:	0.06 to 0.12
Operating temperature range for the coating:	-250 °C to 290 °C
Acid resistance:	Outstanding
Resistance to alkali:	Very good
Resistance to solvents:	Outstanding

*Some particles are generated by the wear between the nut and the shaft. Over time, the shaft can show signs of a polished finish. This is not necessarily an indication of a malfunction.

Inquiry form

Contact address

Company:

Address:

Contact: Contact:

Phone: Phone:

Fax: Fax:

e-mail: e-mail:

Recirculating ball screw parameters

Diameter: mm Lead: mm Thread direction: Clockwise Counter-clockwise

Precision: /300 mm Nut design: Backlash-free: Preloaded: Backlash:

Stroke length: mm Track length: mm Total length: mm

Application:

Environment:

Lubrication: Oil Grease

Quantity: Annual requirement: Quantity: Delivery lot

Mounting the ball screw

Motion system element: Shaft Nut Mounting position: Horizontal Vertical Diagonal

Maximum speed: Rpm Maximum load: kN

Bearing scenario:

fixed-fixed

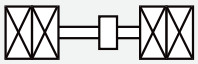

loose-fixed

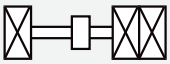

loose-loose

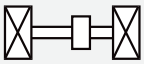

free-fixed

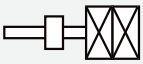

Load/service life specifications

Usage:			Load (N)	Speed (m/s)	Time period (s)
Required service life:	$x10^6$ rev.	F_1			
Required service life:	hrs	F_2			
Minimum dynamic load:	kN	F_3			

Module construction options

- Shafts, cut to length, with ready-mounted nuts
- Shafts, cut to length, with separately supplied nuts
- Shafts, annealed ends, with ready-mounted nuts
- Shafts, annealed ends, with separately supplied nuts
- Shafts, fully machined, with ready-mounted nuts
- Shafts, fully machined, with ready-mounted nuts and bearing units

Applications

Installing a rotating ball nut

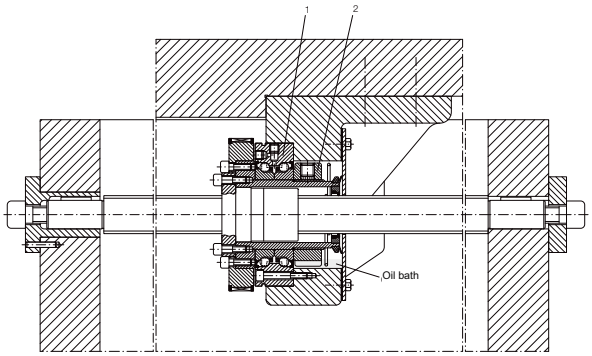

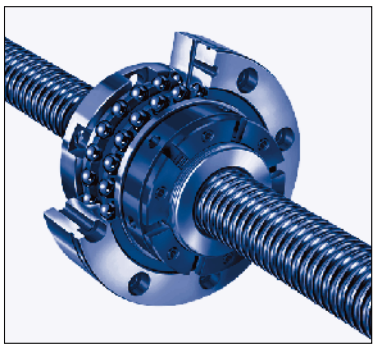

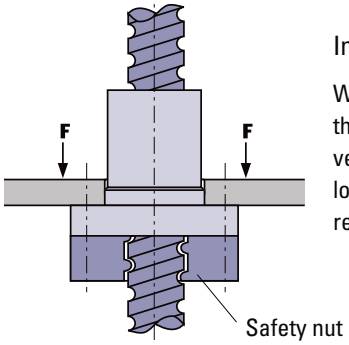

Installing a safety nut

We recommend using a safety nut if the ball screw is being installed in a vertical direction. This will take the load if the ball nut is destroyed as a result of powerful forces.

Packaging, transport, storage, installation, lubrication, assembly, End journal

1. **Storage/packaging**
   Precondition for storage for up to 6 months in dry conditions:
   preservation with Zeller+Gmelin Multicor LF80.
   Ball screws to be wrapped in plastic film with kieselguhr packet.

2. **Installation**
   2.1 Misalignment shortens service life
   2.2 Ball screws should be cleaned using an environmentally friendly substance before installation
   2.3 Treat with the designated lubricant immediately after cleaning

3. **Lubrication by the customer** (see pages 58 and 59)

4. **Removal of ball nuts by the customer**
   These should only be removed when absolutely necessary. To prevent balls being lost, the nut should be screwed onto a sleeve.

5. **Installation by the customer**
   The installation process is performed in reverse. Do not use unnecessary force when screwing the nut onto the ball screw.

6. **Adjustment of ball nuts by the customer**
   We recommend that any alterations to the preload are either made at the factory or on site by our customer service personnel.

7. **End journal**
   7.1 Cover the ball nut on the ball screw
   7.2 Remove any hard areas by grinding or annealing them at around 900°C and then machining
   7.3 Straighten any ball screws which may have become skewed

Service offer

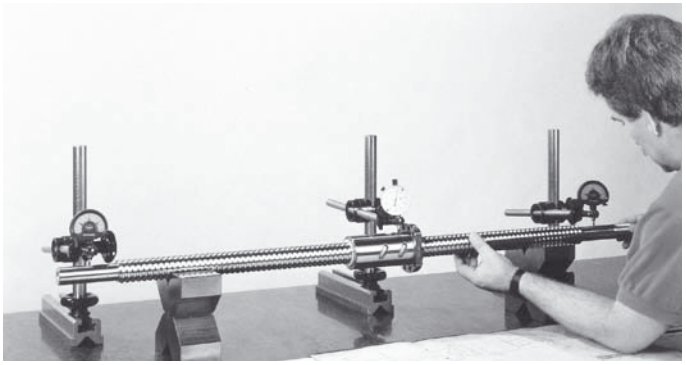

We are able to perform expert repair work on ball screws at short notice, both at our own and our customers' premises. This service is also available for products manufactured by other companies. Our standard range enables replacement items to be provided at short notice.

If necessary, please contact:

Thomson Neff GmbH
Service
Nürtinger Strasse 70
D-72649 Wolfschlugen
or telephone +49 (0)7022 504376
or e-mail to: service.wolfschlugen@thomsonlinear.com

Dimensions, drilling patterns and forms of ball screw nuts

FK, FH, FL and KGF-D nut styles: Drilling pattern 1

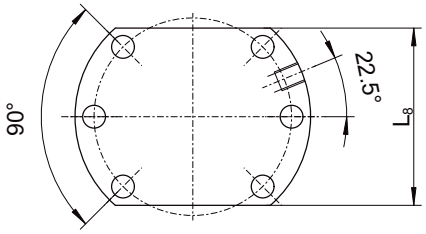

FK, FH, FL and KGF-D nut styles: Drilling pattern 2

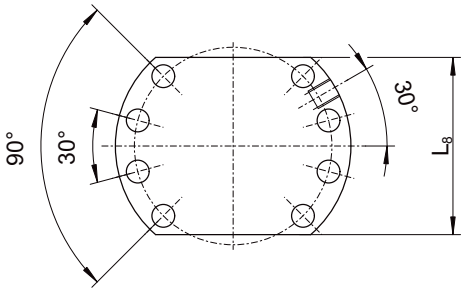

KGF-D nut styles: Drilling pattern 3

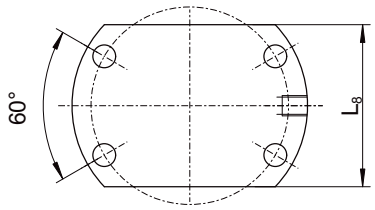

KGF-N nut styles: Drilling pattern 4

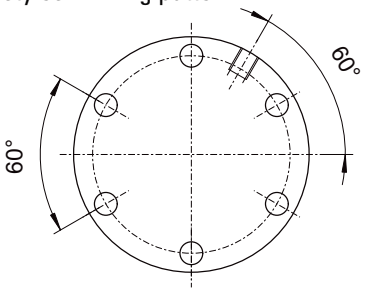

KGF-D and KGF-N nut styles: Form E

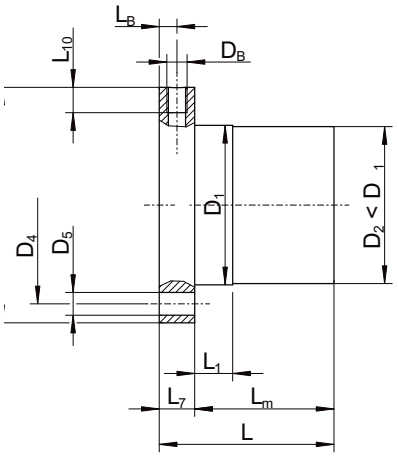

FK, FH, FL, KGF-D and KGF-N nut styles: Form S

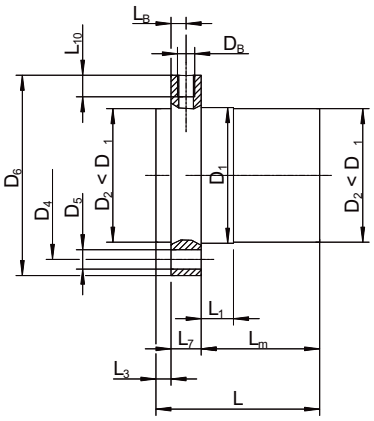

KGM-D and KGM-N nut styles: Form E

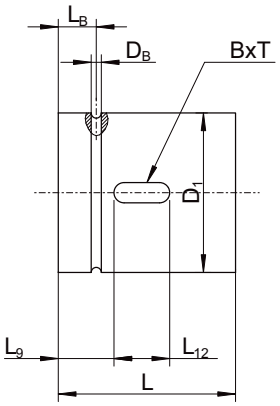

KGM-D and KGM-N nut styles: Form S

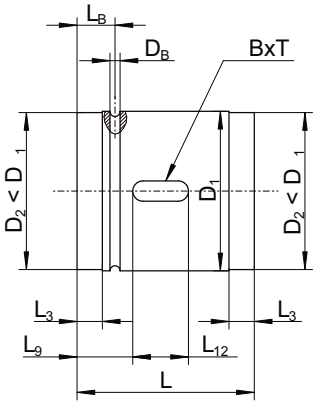

ZG nut style

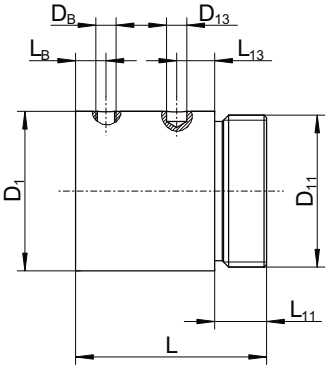

Notes

EUROPE

Germany
Thomson
Nürtinger Strasse 70
72649 Wolfschlugen, Germany
Phone: +49 (0) 7022 504 0
Fax : +49 (0) 7022 504 405
E-mail: sales.germany@thomsonlinear.com

France
Thomson
C.P 80018
12, Rue Antoine Becquerel – Z.I. Sud
72026 Le Mans Cedex 2
Phone: +33 (0) 243 50 03 30
Fax : +33 (0) 243 50 03 39
E-mail: sales.france@thomsonlinear.com

United Kingdom
Thomson
Fishleigh Road
Roundswell Business Park
Barnstaple
Devon, EX31 3UD
Phone: +44 (0) 1271 334 500
Fax: +44 (0) 1271 334 501
E-mail: sales.uk@thomsonlinear.com

Italy
Thomson
Largo Brughetti
20030 Bovisio Masciago (MI)
Phone: +39 0362 594260
Fax: +39 0362 594263
E-mail: info@thomsonlinear.it

Sweden
Thomson
Estridsväg 10
291 09 Kristianstad
Phone: +46 (0) 44 24 67 00
Fax: +46 (0) 44 24 40 85
E-mail: sales.scandinavia@thomsonlinear.com

Spain
Thomson
Rbla Badal, 29-31 7th, 1st
08014 Barcelona
Phone: +34 (0) 9329 80278
Fax: + 34 (0) 9329 80278
E-mail: josep.estaran@thomsonlinear.com

USA, Canada and Mexico

Thomson
203A West Rock Road
Radford, VA 24141
Phone: +1 540 633 3400
Fax: +1 540 639 4162
E-mail: Thomson@thomsonlinear.com
Literature: literature.thomsonlinear.com

ASIA

Asia Pacific
Thomson
Unit A, 16 Floor, 169 Electric Road
Manulife Tower, North Point
Hong Kong
Phone: +852 2503 6581
Fax: +852 2571 8585
E-mail: victor.lim@thomsonlinear.com

China
Thomson
Rm 2205, Scitech Tower
22 Jianguomen Wai Street
Beijing 100004
Phone: +86 400 6661 802
Fax: +86 10 6515 0263
E-mail: sales.china@thomsonlinear.com

India
Thomson
Unit No 2, SDF 1 Seepz Andheri
Mumbai 400 096
Phone: +91 22 2829 4058
Fax: +91 22 2839 4036
E-mail: richard.teo@thomsonlinear.com

Japan
Thomson Japan
2F, Tokyu Reit Hatchobori Bldg,
2-7-1 Hatchobori Chuo-ku,
Tokyo 104-0032
Phone: +81 3 6222 1051
Fax: +81 3 6222 1055
E-mail: info@danahermotion.co.jp

Korea
Thomson
Room No.715, Western Tower II
867, Janghang-dong
Ilsandong-gu, Koyang-city
Kyunggi-do, 410-380
Phone: +82 31 931 5170
Fax: +82 31 931 5176
E-mail: aaron.kim@danahermotion.com

THOMSON™

Linear Motion. ***Optimized.***

www.thomsonlinear.com

EU 201012-20 LIM 2K K&P 12/2010 EN
Right to make changes reserved. Before starting work, the user must ensure that the product is suited to the intended use.
All brand names are the property of the respective owners. © Thomson 2010